CERTIFICADO DE HOMOLOGACIÓN DE TIPO UE DE VEHÍCULO COMPLETO /

EU WHOLE-VEHICLE TYPE-APPROVAL CERTIFICATE

Comunicación relativa a / *Communication concerning*:

- La homologación de tipo UE de un vehículo [1] / *EU whole-vehicle type-approval* [1]
- ~~La extensión de la homologación de tipo UE de un vehículo~~ [1] / ~~*extension of EU whole-vehicle type-approval*~~ [1]
- ~~La denegación de la homologación de tipo UE de un vehículo~~ [1] ~~/ *refusal of EU whole-vehicle type-approval*~~ [1]
- ~~La retirada de la homologación de tipo UE de un vehículo~~ [1] ~~/ *withdrawal of EU whole-vehicle type-approval*~~ [1]

de un tipo de vehículo completo / *of a complete vehicle type*

en relación con el Reglamento (UE) nº 168/2013, modificado en último lugar por el Reglamento (UE) nº 2024/2847 / *with regard to Regulation (EU) No 168/2013, as last amended by Regulation (EU) No 2024/2847*

Número de homologación de tipo UE / *EU type-approval number* : e9*168/2013*16391*00

Motivo de la extensión / *Reason for extension*: ----

SECCIÓN I / *SECTION I*

0.1.	Marca (nombre comercial del fabricante) / *Make (trade name of manufacturer)*	: JINMA, RUNHORSE
0.2.	Tipo [2] / *Type* [2]	: TEV
0.2.1.	Variantes [2] / *Variant(s)* [2]	: 00, 01
0.2.2.	Versiones [2] / *Version(s)* [2]	: 00, 01, 02
0.2.3.	Denominaciones comerciales (de haberlas) / *Commercial name(s) (if available)*	: TEV
0.3.	Categoría, subcategoría y subsubcategoría del vehículo [3] / *Category, subcategory and sub-subcategory of vehicle* [3]	: L7e-CU
0.4.	Razón social y dirección del fabricante del vehículo completo / *Company name and address of manufacturer of the complete vehicle*	: HONG KONG RUNHORSE HOLDING CO., LIMITED FLAT 01C3, 10/F CARNIVAL COMMERCIAL BUILDING 18 JAVA ROAD, NORTH POINT, HONG KONG, CHINA

[1] Tachar según proceda / *Delete where not applicable*
[2] Indicar el código alfanumérico de tipo-variante-versión o «TVV» asignado a cada tipo, variante y versión, conforme al punto 2.3 de la parte B del anexo I / *Indicate the alphanumeric code Type-Variant-Version or 'TVV' allocated to each type, variant and version as set out in point 2.3 of Part B of Annex I*
[3] Clasificación con arreglo al artículo 4 y al anexo I del Reglamento (UE) nº 168/2013; deberá indicarse la codificación, por ejemplo «L3e-A1E» para una motocicleta enduro de prestaciones bajas / *Classified according to Article 4 of and Annex I to Regulation (EU) No 168/2013, the coding shall be indicated, e.g. 'L3e-A1E' for a low-performance Enduro motor-cycle*

0.4.1. Nombre y dirección de las plantas de montaje / *Name(s) and address(es) of assembly plants* : Qingzhou Dajinma Motorcycle Co., Ltd
No. 3081, Dongjing Road, Qingzhou
Economic Development Zone, Weifang,
Shandong Province, China

0.4.2. En su caso, nombre y dirección del representante autorizado del fabricante / *Name and address of manufacturer's authorised representative, if any* : Mobit Belgium
Eindeken 3, 9940 Evergem, Belgium

SECCIÓN II / *SECTION II*

1. Servicio técnico encargado de realizar los ensayos / *Technical service responsible for carrying out the tests* : IDIADA

2. Fecha del acta de ensayo / *Date of test report* : 08.01.2025

3. Número del acta de ensayo / *Number of test report* : CN24100398

SECCIÓN III / *SECTION III*

El abajo firmante certifica que la descripción del fabricante, que figura en la ficha de características adjunta, del tipo de vehículo indicado anteriormente, del que se han presentado como prototipos una o varias muestras representativas seleccionadas por la autoridad de homologación de tipo UE, es exacta y que los resultados de los ensayos adjuntos son aplicables al tipo de vehículo / *The undersigned hereby certifies the accuracy of the manufacturer's description in the attached information document of the vehicle type described above, for which one or more representative samples, selected by the EU type-approval authority, have been submitted as prototypes of the vehicle type and that the attached test results apply to the vehicle type*

1. El tipo de vehículo completo cumple/~~no cumple~~ (1) todos los requisitos pertinentes al anexo II del Reglamento (UE) Nº 168/2013*2024/2847 / *The complete vehicle type meets/~~does not meet~~ (1) all relevant requirements as listed in Annex II to Regulation (EU) No 168/2013*2024/2847*

1.1. Restricciones de validez (1) (6) / *Restrictions of validity (1) (6)* : N.A.

1.2. Exenciones aplicadas (1) (6) (7) / *Waivers applied (1) (6) (7)* : N.A.

1.2.1. Motivos de las exenciones (1) (7) / *Reasons for the waivers (1) (7)* : N.A.

1.2.2. Requisitos alternativos (1) (7) / *Alternative requirements (1) (7)* : N.A.

(1) Tachar según proceda / *Delete where not applicable*
(6) Solamente aplicable a la homologación de tipo de un vehículo como exención para nuevas tecnologías o nuevos conceptos, con arreglo al artículo 40 del Reglamento (UE) nº 168/2013 / *Applicable only for type-approval of a vehicle as an exemption for new technology or new concept, pursuant to Article 40 of Regulation (EU) No 168/2013*
(7) Solamente aplicable a la homologación de tipo de vehículos de una serie corta nacional, con arreglo al artículo 42 del Reglamento (UE) nº 168/2013 / *Applicable only for vehicle type-approval for a national small series, pursuant to Article 42 of Regulation (EU) No 168/2013*

2. Se concede/~~extiende~~/~~deniega~~/~~retira~~ [1] la homologación /
The approval is granted/~~extended~~/~~refused~~/~~withdrawn~~ [1]

2.1. ~~Se concede la homologación con arreglo al artículo 40 del Reglamento (UE) Nº 168/2013, de modo que la homologación solo es válida hasta el dd/mm/aaaa~~ [6] / ~~*The approval is granted in accordance with Article 40 of Regulation (EU) No 168/2013 and the validity of the approval is thus limited to dd/mm/yyyy*~~ [6]

Lugar / *Place*: Madrid

Fecha / *Date*: Ver firma electrónica / *See electronic signature*

Firma / *Signature*:

EL DIRECTOR GENERAL DE ESTRATEGIA INDUSTRIAL Y DE LA PEQUEÑA Y MEDIANA EMPRESA

Anexos / *Attachments*:

- Expediente de homologación / *Information package*
- Resumen hoja de resultados de los ensayos / *Test results sheet summary*
- Nombre de las personas autorizadas a firmar los certificados de conformidad, muestras de sus firmas e indicación de su cargo en la empresa / *Name(s) and specimen(s) of the signature(s) of the person(s) authorised to sign certificates of conformity and a statement of their position in the company*
- Ejemplar cumplimentado del certificado de conformidad / *A completed specimen of the certificate of conformity*

[1] Tachar según proceda / *Delete where not applicable*
[6] Solamente aplicable a la homologación de tipo de un vehículo como exención para nuevas tecnologías o nuevos conceptos, con arreglo al artículo 40 del Reglamento (UE) nº 168/2013 / *Applicable only for type-approval of a vehicle as an exemption for new technology or new concept, pursuant to Article 40 of Regulation (EU) No 168/2013*

ADENDA DEL CERTIFICADO DE HOMOLOGACIÓN DE TIPO UE /
ADDENDUM TO THE EU TYPE-APPROVAL CERTIFICATE

Conforme al Anexo VI, Apéndice 3, del Reglamento de Ejecución (UE) número 901/2014*2020/239 de la Comisión / *According to Annex VI, Appendix 3, of Commission Implementing Regulation (EU) number 901/2014*2020/239*

LISTA DE LOS ACTOS REGLAMENTARIOS QUE CUMPLE EL TIPO DE VEHÍCULO /
LIST OF REGULATORY ACTS WITH WHICH THE TYPE OF VEHICLE COMPLIES

Cumplimentar solo en caso de homologación de tipo de conformidad con el artículo 30, apartado 6, del Reglamento (UE) Nº 168/2013 / *To be filled in only in the case of type-approval in accordance with Article 30(6) of Regulation (EU) No 168/2013*

Entrada / *Item*	Asunto / *Subject*	Referencia del acto reglamentario / *Regulatory act reference*	Modificado por / *As amended by*	Aplicable a las versiones / *Applicable to versions*
A.	REQUISITOS DE EFICACIA MEDIOAMBIENTAL Y DE RENDIMIENTO DE LA UNIDAD DE PROPULSIÓN / *ENVIRONMENTAL AND PROPULSION UNIT PERFORMANCE REQUIREMENTS*			
1	Emisiones del tubo de escape tras un arranque en frio / *Tailpipe emissions after cold start*	Reglamento Delegado (UE) Nº 134/2014 de la Comisión, anexo II / *Commission Delegated Regulation (EU) No 134/2014 Annex II*	Reglamento Delegado (UE) Nº 2023/2724 / *Commission Delegated Regulation (EU) No 2023/2724*	---
2	Emisiones del tubo de escape (al relentí aumentado) o en aceleración libre / *Tailpipe emissions at (increased idle) / free acceleration test*	Reglamento Delegado (UE) Nº 134/2014 de la Comisión, anexo III / *Commission Delegated Regulation (EU) No 134/2014 Annex III*	Reglamento Delegado (UE) Nº 2023/2724 / *Commission Delegated Regulation (EU) No 2023/2724*	---
3	Emisiones de gases del cárter / *Emissions crank-case gases*	Reglamento Delegado (UE) Nº 134/2014 de la Comisión, anexo IV / *Commission Delegated Regulation (EU) No 134/2014 Annex IV*	Reglamento Delegado (UE) Nº 2023/2724 / *Commission Delegated Regulation (EU) No 2023/2724*	---
4	Emisiones de evaporación / *Evaporative emissions*	Reglamento Delegado (UE) Nº 134/2014 de la Comisión, anexo V / *Commission Delegated Regulation (EU) No 134/2014 Annex V*	Reglamento Delegado (UE) Nº 2023/2724 / *Commission Delegated Regulation (EU) No 2023/2724*	---
5	Durabilidad de los dispositivos de control de la contaminación / *Durability of pollution-control devices*	Reglamento Delegado (UE) Nº 134/2014 de la Comisión, anexo VI / *Commission Delegated Regulation (EU) No 134/2014 Annex VI*	Reglamento Delegado (UE) Nº 2023/2724 / *Commission Delegated Regulation (EU) No 2023/2724*	---
6	Medición de las emisiones de CO_2 consumo de combustible, consumo de energía eléctrica y determinación de la autonomía eléctrica / *Measurament of CO_2 emissions, fuel consumption, electric energy consumption and electric range determination*	Reglamento Delegado (UE) Nº 134/2014 de la Comisión, anexo VII / *Commission Delegated Regulation (EU) No 134/2014 Annex VII*	Reglamento Delegado (UE) Nº 2023/2724 / *Commission Delegated Regulation (EU) No 2023/2724*	Todas / *All*
7	Ensayos medioambientales del diagnóstico a bordo (DAB) / *Environmental on-board diagnosis (OBD) tests*	Reglamento Delegado (UE) Nº 134/2014 de la Comisión, anexo VIII / *Commission Delegated Regulation (EU) No 134/2014 Annex VIII*	Reglamento Delegado (UE) Nº 2023/2724 / *Commission Delegated Regulation (EU) No 2023/2724*	---

Entrada / *Item*	Asunto / *Subject*	Referencia del acto reglamentario / *Regulatory act reference*	Modificado por / *As amended by*	Aplicable a las versiones / *Applicable to versions*
8	Nivel sonoro admisible / *Permissible sound level*	Reglamento Delegado (UE) Nº 134/2014 de la Comisión, anexo IX / *Commission Delegated Regulation (EU) No 134/2014 Annex IX*	Reglamento Delegado (UE) Nº 2023/2724 / *Commission Delegated Regulation (EU) No 2023/2724*	---
9	Procedimientos y requisitos técnicos relativos a la velocidad máxima del vehículo por construcción, el par máximo, la potencia total continua máxima y la potencia de pico máxima / *Procedures and technical requirements on maximum vehicle design speed, maximum torque, maximum continuous total power and maximum peak power*	Reglamento Delegado (UE) Nº 134/2014 de la Comisión, anexo X / *Commission Delegated Regulation (EU) No 134/2014 Annex X*	Reglamento Delegado (UE) Nº 2023/2724 / *Commission Delegated Regulation (EU) No 2023/2724*	Todas / *All*
10	Definición de la familia de vehículos y de propulsiones / *Vehicle propulsion family definition*	Reglamento Delegado (UE) Nº 134/2014 de la Comisión, anexo XI / *Commission Delegated Regulation (EU) No 134/2014 Annex XI*	Reglamento Delegado (UE) Nº 2023/2724 / *Commission Delegated Regulation (EU) No 2023/2724*	---
B.	REQUISITOS DE SEGURIDAD FUNCIONAL DE LOS VEHÍCULOS / *VEHICLE FUNCTIONAL SAFETY REQUIREMENTS*			
1	Avisadores acústicos / *Audible warning devices*	Reglamento Delegado (UE) Nº 3/2014 de la Comisión, anexo II / *Commission Delegated Regulation (EU) No 3/2014 Annex II*	Reglamento Delegado (UE) Nº 2016/1824 / *Commission Delegated Regulation (EU) No 2016/1824*	Todas / *All*
2	Frenado, incluidos los sistemas de frenado antibloqueo y los sistemas de frenado combinado / *Braking, including anti-lock and combined brake system*	Reglamento Delegado (UE) Nº 3/2014 de la Comisión, anexo III / *Commission Delegated Regulation (EU) No 3/2014 Annex III*	Reglamento Delegado (UE) Nº 2016/1824 / *Commission Delegated Regulation (EU) No 2016/1824*	Todas / *All*
3	Seguridad eléctrica / *Electric safety*	Reglamento Delegado (UE) Nº 3/2014 de la Comisión, anexo IV / *Commission Delegated Regulation (EU) No 3/2014 Annex IV*	Reglamento Delegado (UE) Nº 2016/1824 / *Commission Delegated Regulation (EU) No 2016/1824*	Todas / *All*
4	Requisitos aplicables a la declaración del fabricante sobre ensayos de durabilidad de los sistemas, piezas y equipos esenciales para la seguridad funcional / *Manufacturer declaration requirements regarding endurance testing of functional safety-critical systems, parts and equipment*	Reglamento Delegado (UE) Nº 3/2014 de la Comisión, anexo V / *Commission Delegated Regulation (EU) No 3/2014 Annex V*	Reglamento Delegado (UE) Nº 2016/1824 / *Commission Delegated Regulation (EU) No 2016/1824*	Todas / *All*
5	Estructuras de protección delanteras y traseras / *Front and rear protective structures*	Reglamento Delegado (UE) Nº 3/2014 de la Comisión, anexo VI / *Commission Delegated Regulation (EU) No 3/2014 Annex VI*	Reglamento Delegado (UE) Nº 2016/1824 / *Commission Delegated Regulation (EU) No 2016/1824*	---

Entrada / *Item*	Asunto / *Subject*	Referencia del acto reglamentario / *Regulatory act reference*	Modificado por / *As amended by*	Aplicable a las versiones / *Applicable to versions*
6	Acristalamiento, limpiaparabrisas, lavaparabrisas y sistemas de desescarchado y de desempañado / *Glazing, windscreen wipers and washers, and defrosting and demisting systems*	Reglamento Delegado (UE) Nº 3/2014 de la Comisión, anexo VII / *Commission Delegated Regulation (EU) No 3/2014 Annex VII*	Reglamento Delegado (UE) Nº 2016/1824 / *Commission Delegated Regulation (EU) No 2016/1824*	Todas / *All*
7	Mandos accionados por el conductor, con identificación de los mandos, los testigos y indicadores / *Driver-operated controls including indentification of controls, tell-tales and indicators*	Reglamento Delegado (UE) Nº 3/2014 de la Comisión, anexo VIII / *Commission Delegated Regulation (EU) No 3/2014 Annex VIII*	Reglamento Delegado (UE) Nº 2016/1824 / *Commission Delegated Regulation (EU) No 2016/1824*	Todas / *All*
8	Instalación de dispositivos de alumbrado y señalización luminosa, incluidos el encendido y apagado automáticos del alumbrado / *Installation of lighting and light-signalling devices, including automatic switching of lighting*	Reglamento Delegado (UE) Nº 3/2014 de la Comisión, anexo IX / *Commission Delegated Regulation (EU) No 3/2014 Annex IX*	Reglamento Delegado (UE) Nº 2016/1824 / *Commission Delegated Regulation (EU) No 2016/1824*	Todas / *All*
9	Visibilidad trasera / *Rearward visibility*	Reglamento Delegado (UE) Nº 3/2014 de la Comisión, anexo X / *Commission Delegated Regulation (EU) No 3/2014 Annex X*	Reglamento Delegado (UE) Nº 2016/1824 / *Commission Delegated Regulation (EU) No 2016/1824*	Todas / *All*
10	Estructura de protección en caso de vuelco (ROPS) / *Rollover protective structure (ROPS)*	Reglamento Delegado (UE) Nº 3/2014 de la Comisión, anexo XI / *Commission Delegated Regulation (EU) No 3/2014 Annex XI*	Reglamento Delegado (UE) Nº 2016/1824 / *Commission Delegated Regulation (EU) No 2016/1824*	---
11	Cinturones de seguridad y sus anclajes / *Safety-belt anchorages and safety-belts*	Reglamento Delegado (UE) Nº 3/2014 de la Comisión, anexo XII / *Commission Delegated Regulation (EU) No 3/2014 Annex XII*	Reglamento Delegado (UE) Nº 2016/1824 / *Commission Delegated Regulation (EU) No 2016/1824*	Todas / *All*
12	Plazas de asiento (sillines y asientos) / *Seating positions (saddles and seats)*	Reglamento Delegado (UE) Nº 3/2014 de la Comisión, anexo XIII / *Commission Delegated Regulation (EU) No 3/2014 Annex XIII*	Reglamento Delegado (UE) Nº 2016/1824 / *Commission Delegated Regulation (EU) No 2016/1824*	Todas / *All*
13	Maniobrabilidad, propiedades de giro en curva y capacidad de giro / *Steer-ability, cornering properties and turn-ability*	Reglamento Delegado (UE) Nº 3/2014 de la Comisión, anexo XIV / *Commission Delegated Regulation (EU) No 3/2014 Annex XIV*	Reglamento Delegado (UE) Nº 2016/1824 / *Commission Delegated Regulation (EU) No 2016/1824*	Todas / *All*
14	Instalación de neumáticos / *Installation of tyres*	Reglamento Delegado (UE) Nº 3/2014 de la Comisión, anexo XV / *Commission Delegated Regulation (EU) No 3/2014 Annex XV*	Reglamento Delegado (UE) Nº 2016/1824 / *Commission Delegated Regulation (EU) No 2016/1824*	Todas / *All*
15	Placa de limitación de la velocidad máxima del vehículo y su emplazamiento en el vehículo / *Vehicle maximum speed limitation plate and its location on the vehicle*	Reglamento Delegado (UE) Nº 3/2014 de la Comisión, anexo XVI / *Commission Delegated Regulation (EU) No 3/2014 Annex XVI*	Reglamento Delegado (UE) Nº 2016/1824 / *Commission Delegated Regulation (EU) No 2016/1824*	---

Entrada / *Item*	Asunto / *Subject*	Referencia del acto reglamentario / *Regulatory act reference*	Modificado por / *As amended by*	Aplicable a las versiones / *Applicable to versions*
16	Protección de los ocupantes del vehículo, incluidos el acondicionamiento interior y las puertas del vehículo / *Vehicle occupant protection, including interior fittings and vehicle doors*	Reglamento Delegado (UE) Nº 3/2014 de la Comisión, anexo XVII / *Commission Delegated Regulation (EU) No 3/2014 Annex XVII*	Reglamento Delegado (UE) Nº 2016/1824 / *Commission Delegated Regulation (EU) No 2016/1824*	Todas / *All*
17	Potencia nominal o neta continua máxima y/o limitación de la velocidad del vehículo por construcción / *Maximum continuous rated or net power and/or vehicle speed limitation by design*	Reglamento Delegado (UE) Nº 3/2014 de la Comisión, anexo XVIII / *Commission Delegated Regulation (EU) No 3/2014 Annex XVIII*	Reglamento Delegado (UE) Nº 2016/1824 / *Commission Delegated Regulation (EU) No 2016/1824*	Todas / *All*
18	Requisitos relativos a la integridad de la estructura del vehículo / *Requirements on vehicle structure integrity*	Reglamento Delegado (UE) Nº 3/2014 de la Comisión, anexo XIX / *Commission Delegated Regulation (EU) No 3/2014 Annex XIX*	Reglamento Delegado (UE) Nº 2016/1824 / *Commission Delegated Regulation (EU) No 2016/1824*	Todas / *All*
C1.	FABRICACIÓN DE VEHÍCULOS Y REQUISITOS GENERALES A LA HOMOLOGACIÓN DE TIPO / *VEHICLE CONSTRUCTION AND GENERAL TYPE-APPROVAL REQUIREMENTS*			
1	Medidas de prevención de la manipulación del grupo motopropulsor (antimanipulación) / *Powertrain tampering prevention measures (anti-tampering)*	Reglamento Delegado (UE) Nº 44/2014 de la Comisión, anexo II / *Commission Delegated Regulation (EU) No 44/2014 Annex II*	Reglamento Delegado (UE) 2018/295 / *Commission Delegated Regulation (EU) 2018/295*	Todas / *All*
2	Disposiciones relativas a los procedimientos de homologación de tipo / *Arrangements for type-approval procedures*	Reglamento Delegado (UE) Nº 44/2014 de la Comisión, anexo III / *Commission Delegated Regulation (EU) No 44/2014 Annex III*	Reglamento Delegado (UE) 2018/295 / *Commission Delegated Regulation (EU) 2018/295*	Todas / *All*
3	Conformidad de la producción / *Conformity of production*	Reglamento Delegado (UE) Nº 44/2014 de la Comisión, anexo IV / *Commission Delegated Regulation (EU) No 44/2014 Annex IV*	Reglamento Delegado (UE) 2018/295 / *Commission Delegated Regulation (EU) 2018/295*	Todas / *All*
4	Dispositivos de acoplamiento y de fijación / *Coupling devices and attachments*	Reglamento Delegado (UE) Nº 44/2014 de la Comisión, anexo V / *Commission Delegated Regulation (EU) No 44/2014 Annex V*	Reglamento Delegado (UE) 2018/295 / *Commission Delegated Regulation (EU) 2018/295*	---
5	Dispositivos de protección contra la utilización no autorizada / *Devices to prevent unauthorised use*	Reglamento Delegado (UE) Nº 44/2014 de la Comisión, anexo VI / *Commission Delegated Regulation (EU) No 44/2014 Annex VI*	Reglamento Delegado (UE) 2018/295 / *Commission Delegated Regulation (EU) 2018/295*	Todas / *All*
6	Compatibilidad electromagnética (CEM) / *Electromagnetic compatibility (EMC)*	Reglamento Delegado (UE) Nº 44/2014 de la Comisión, anexo VII / *Commission Delegated Regulation (EU) No 44/2014 Annex VII*	Reglamento Delegado (UE) 2018/295 / *Commission Delegated Regulation (EU) 2018/295*	Todas / *All*
7	Salientes exteriores / *External projections*	Reglamento Delegado (UE) Nº 44/2014 de la Comisión, anexo VIII / *Commission Delegated Regulation (EU) No 44/2014 Annex VIII*	Reglamento Delegado (UE) 2018/295 / *Commission Delegated Regulation (EU) 2018/295*	Todas / *All*

Entrada / *Item*	Asunto / *Subject*	Referencia del acto reglamentario / *Regulatory act reference*	Modificado por / *As amended by*	Aplicable a las versiones / *Applicable to versions*
8	Almacenamiento de combustible / *Fuel storage*	Reglamento Delegado (UE) Nº 44/2014 de la Comisión, anexo IX / *Commission Delegated Regulation (EU) No 44/2014 Annex IX*	Reglamento Delegado (UE) 2018/295 / *Commission Delegated Regulation (EU) 2018/295*	---
9	Plataformas de carga / *Load platforms*	Reglamento Delegado (UE) Nº 44/2014 de la Comisión, anexo X / *Commission Delegated Regulation (EU) No 44/2014 Annex X*	Reglamento Delegado (UE) 2018/295 / *Commission Delegated Regulation (EU) 2018/295*	Todas / *All*
10	Masas y dimensiones / *Masses and dimensions*	Reglamento Delegado (UE) Nº 44/2014 de la Comisión, anexo XI / *Commission Delegated Regulation (EU) No 44/2014 Annex XI*	Reglamento Delegado (UE) 2018/295 / *Commission Delegated Regulation (EU) 2018/295*	Todas / *All*
11	Requisitos funcionales del diagnóstico a bordo (DAB) / *On-board diagnostics (OBD) functional requirements*	Reglamento Delegado (UE) Nº 44/2014 de la Comisión, anexo XII / *Commission Delegated Regulation (EU) No 44/2014 Annex XII*	Reglamento Delegado (UE) 2018/295 / *Commission Delegated Regulation (EU) 2018/295*	Todas / *All*
12	Asideros y reposapiés para pasajeros / *Passenger handholds and footrests*	Reglamento Delegado (UE) Nº 44/2014 de la Comisión, anexo XIII / *Commission Delegated Regulation (EU) No 44/2014 Annex XIII*	Reglamento Delegado (UE) 2018/295 / *Commission Delegated Regulation (EU) 2018/295*	---
13	Espacio destinado a la placa de matrícula / *Registration plate space*	Reglamento Delegado (UE) Nº 44/2014 de la Comisión, anexo XIV / *Commission Delegated Regulation (EU) No 44/2014 Annex* XIV	Reglamento Delegado (UE) 2018/295 / *Commission Delegated Regulation (EU) 2018/295*	Todas / *All*
14	Acceso a la información sobre la reparación y el mantenimiento / *Access to repair and maintenance information*	Reglamento Delegado (UE) Nº 44/2014 de la Comisión, anexo XV / *Commission Delegated Regulation (EU) No 44/2014 Annex* XV	Reglamento Delegado (UE) 2018/295 / *Commission Delegated Regulation (EU) 2018/295*	Todas / *All*
15	Caballetes / *Stands*	Reglamento Delegado (UE) Nº 44/2014 de la Comisión, anexo XVI / *Commission Delegated Regulation (EU) No 44/2014 Annex* XVI	Reglamento Delegado (UE) 2018/295 / *Commission Delegated Regulation (EU) 2018/295*	---
D.	REQUISITOS ADMINISTRATIVOS PARA LA HOMOLOGACIÓN Y LA VIGILANCIA DEL MERCADO / *ADMINISTRATIVE REQUIREMENTS FOR THE APPROVAL AND MARKET SURVEILLANCE*			
1	Placa reglamentaria y marca de homologación de tipo UE / *Statutory plate and EU type-approval mark*	Reglamento de Ejecución (UE) Nº 901/2014, anexo V / *Implementing Regulation (EU) No 901/2014 Annex V*	Reglamento delegado (UE) 2020/239 / *Commission delegated regulaion (EU) 2020/239*	Todas / *All*

RESUMEN HOJA DE RESULTADOS DE ENSAYO / *TEST RESULTS SHEET SUMMARY*

A) REQUISITOS DE EFICACIA MEDIOAMBIENTAL Y DE RENDIMIENTO DE LA UNIDAD DE PROPULSIÓN CONFORME EL REGLAMENTO 134/2014/EU / *ENVIRONMENTAL AND PROPULSION UNIT PERFORMANCE REGARDING REGULATION 134/2014/EU*

1. Fase medioambiental del vehículo ensayado / *Environmental step of test vehicle* : Euro 5+

2. Programa de conducción aplicable del ensayo de tipo I / *Applicable test type I driving schedule* : WMTC fase 3 / *WMTC stage 3*

3. Ensayo de tipo I: emisiones del tubo de escape tras un arranque en frío / *Test type I: tailpipe emissions after cold start*

   N.A.

4. Resultados del ensayo de tipo II: emisiones del tubo de escape al ralentí (aumentado) y en aceleración libre / *Test type II results: tailpipe emissions at (increased idle)/free acceleration*

   N.A.

5. Ensayo de tipo IV: emisiones de evaporación / *Type IV test: evaporative emissions*

   N.A.

6. Ensayo de tipo V: durabilidad de los dispositivos de control de la contaminación / *Test type V: durability of pollution-control devices*

   N.A.

7. Ensayo de tipo VII: medición de las emisiones de CO_2 , consumo de combustible, consumo de energía eléctrica y determinación de la autonomía eléctrica / *Test type VII: measurement of CO_2 emissions, fuel consumption, electric energy consumption and electric range determination*

Cuadro / *Table* 5-9

CUADRO DE RESULTADOS DE LOS ENSAYOS DE TIPO VII PARA PROPULSIONES ELÉCTRICAS PURAS O PROPULSIONES NO RECARGABLES DESDE EL EXTERIOR EQUIPADAS CON UN MOTOR ELÉCTRICO DE PROPULSIÓN / *TEST TYPE VII RESULT TABLE FOR PURE ELECTRIC PROPULSION OR NOT-EXTERNALLY-CHARGEABLE (NOVC) PROPULSIONS EQUIPPED WITH AN ELECTRIC MOTOR FOR PROPULSION*				
	Consumo de energía eléctrica medido / *Measured electric energy consumption* (Wh/km)	Consumo de energía eléctrica declarado / *Declared electric energy consumption* (Wh/km)	Autonomía eléctrica medida / *Measured electric range* (km)	Autonomía eléctrica declarada / *Declared electric range* (km)
Grupo motopropulsor eléctrico puro / *Pure electric powertrain*	Version 00: 88 Wh/km Version 01: 115 Wh/km	Version 00: 88 Wh/km Version 01: 115 Wh/km	Version 00: 191 km Version 01: 151 km	Version 00: 191 km Version 01: 151 km
Grupo motopropulsor eléctrico híbrido no recargable desde el exterior / *NOVC hybrid electric powertrain*	---	---	---	---

8. Ensayo de tipo VIII: diagnóstico a bordo (DAB) medioambiental / *Test type VIII: environmental on-board diagnostic (OBD)*

N.A.

9. Ensayo de tipo IX: nivel sonoro / *Test type IX: sound level*

N.A.

Anexo - Información adicional sobre esta Homologación de tipo

Condiciones de la autorización y pie de recurso

Los vehículos, sistemas, componentes o unidades técnicas independientes fabricados en virtud de esta homologación de tipo deben estar identificados y portar las marcas correspondientes según la reglamentación aplicable.

La producción en serie de vehículos, sistemas, componentes y unidades técnicas independientes debe realizarse de acuerdo con la documentación de homologación. Todo cambio en la producción individualizada requerirá autorización expresa previa por parte de la Autoridad de Homologación Española.

Cualquier modificación en los datos incluidos en el certificado de homologación, como el nombre de la empresa, representante en la UE, dirección y las plantas de fabricación deben ser comunicados inmediatamente a la Autoridad de Homologación Española.

La homologación perderá su validez cuando la misma haya sido retirada o el tipo ya no cumpla con los requisitos legales. La retirada tendrá lugar siempre que hayan dejado de cumplirse los requisitos necesarios para la concesión y mantenimiento de la misma, cuando el fabricante no pueda demostrar a la Autoridad de Homologación el cumplimiento con los requisitos y procedimientos para garantizar la conformidad de la producción, en caso de que el titular no cumpla con sus obligaciones inherentes a la homologación o cuando se determine que el tipo homologado no cumple con los requisitos de seguridad y medio ambiente.

La Autoridad de Homologación de Tipo española podrá verificar el cumplimiento de las obligaciones del fabricante en cualquier momento. En particular, se podrá comprobar la correspondencia del producto con el tipo homologado, así como las medidas establecidas para garantizar la conformidad de la producción. A tal efecto se podrán tomar o solicitar las muestras necesarias. Se permitirá el acceso sin trabas a las instalaciones de producción y almacenamiento a los empleados o representantes de la Autoridad de Homologación Española.

La autorización objeto de esta resolución de homologación de tipo no es transferible. Los derechos de marca de terceros no se encuentran afectados por esta homologación.

Contra la presente Resolución, que no pone fin a la vía administrativa, podrá interponerse recurso de alzada [1] ante la Dirección General de Estrategia Industrial y de la Pequeña y Mediana empresa, o ante la Secretaría de Estado de Industria, en el plazo de un mes a partir del día siguiente a su notificación, de conformidad con los artículos 121 y 122 de la Ley 39/2015, de 1 de octubre, del Procedimiento Administrativo Común de las Administraciones Públicas.

[1] Nota: Para interponer recurso de alzada deberá acceder al siguiente enlace:
https://sede.serviciosmin.gob.es/es-es/procedimientoselectronicos/Paginas/detalle-procedimientos.aspx?IdProcedimiento=157

Annex - Additional Information on this Type Approval

Collateral clauses and right to appeal (Courtesy translation)

All vehicles, systems, components or separate technical units which correspond to the approved type are to be identified and marked according to the applied regulation.

The serial fabrication of vehicles, systems, components or separate technical must be in exact accordance with the approval documents. Changes in the individual production are only allowed with express consent of the Spanish Type Approval Authority.

Changes in the data included in the approval certificate, such as the name of the company, EU representative, address and the manufacturing plant are to be immediately disclosed to the Spanish Type Approval Authority.

The approval expires if it is withdrawn or if the type approved no longer complies with the legal requirements. The revocation can be made if the demanded requirements for issuance and the continuance of the approval no longer exist, if the manufacturer cannot demonstrate to the Type Approval Authority that it comply with the requirements and procedures to guarantee the conformity of production, if the holder of the approval violates the duties involved in the approval or if it is determined that the approved type does not comply with the requirements of traffic safety or environmental protection.

The Spanish Type Approval Authority may check the proper exercise of the conferred authority taken from this approval at any time. In particular, this means the compliant production as well as the measures for conformity of production. For this purpose, samples can be taken or have taken. The employees or the representatives of the Spanish Type Approval Authority may get unhindered access to the production and storage facilities.

The authorization contained with issuance of this approval is not transferable. Trade mark rights of third parties are not affected with this approval.

This approval does not conclude the administrative channel and can be appealed [2] within one month after notification, according to articles 121 and 122 of Ley 39/2015, de 1 de octubre, del Procedimiento Administrativo Común de las Administraciones Públicas. The appeal is to be addressed to Dirección General de Estrategia Industrial y de la Pequeña y Mediana empresa, or Secretaría de Estado de Industria.

[2] *Note: Appeal on the following link:*
https://sede.serviciosmin.gob.es/es-es/procedimientoselectronicos/Paginas/detalle-procedimientos.aspx?IdProcedimiento=157

China Office:

Jucheng Pioneer Park, Building 23, 3999
Xiu Pu Rd, Nan Hui Pudong District,
Shanghai 201315 - China

Tel. +86 (21) 6210 0894
Fax +86 (21) 5208 0556
e-mail: idiada_china@idiada.com

Headquarters:

L'Albornar – P.O.Box 20
E - 43710 Santa Oliva (Tarragona),
Spain

Tel. +34 977 166000
Fax +34 977 166007
e-mail: idiada@idiada.com

INFORME Nº / *REPORT No.* CN24100398

RELATIVO A LA HOMOLOGACIÓN DE TIPO DE HOMOLOGACIÓN EUROPEA DE TIPO SEGÚN EL REGLAMENTO (UE) Nº 168/2013*2024/2847 / *CONCERNING THE TYPE-APPROVAL OF EUROPEAN TYPE-APPROVAL ACCORDING TO REGULATION (EU) NO 168/2013*2024/2847*

Nombre del fabricante / *Manufacturer's name*	:	HONG KONG RUNHORSE HOLDING CO., LIMITED
Dirección del fabricante / *Manufacturer's address*	:	FLAT 01C3, 10/F CARNIVAL COMMERCIAL BUILDING 18 JAVA ROAD, NORTH POINT, HONG KONG, CHINA
Número homologación (si procede) / *Approval number (if applicable)*	:	e9*168/2013*16391*00
Marca del vehículo / *Trade mark*	:	JINMA, RUNHORSE
Tipo / *Type*	:	TEV
Categoría, subcategoría y sub-subcategoría / *Category, subcategory and sub-subcategory*	:	L7e-CU
Nombre del representante (si procede) / *Representative's name (if applicable)*	:	Mobit Belgium
Dirección del representante (si procede) / *Representative's address (if applicable)*	:	Eindeken 3, 9940 Evergem, Belgium
Grado de acabado / *State of completion*	:	Completo / *Complete*
Emplazamiento y método de fijación de las placas reglamentarias / *Location and method of fixation of the statutory plates*	:	C, x -134, y 0, z 680. Clavados / *Riveted*
Emplazamiento del número de identificación del vehículo / *Location of the vehicle identification number*	:	R, x 235, y 325, z 555
Lugar y fecha de emisión del informe / *Place and date*	:	L'Albornar, Santa Oliva (Tarragona), 08.01.2025
Observaciones / *Remarks*	:	---
Motivo de revisión/extensión (cuando proceda) / *Reason for revision/extension (if applicable)*	:	---

CONCLUSIONES / *CONCLUSIONS*: El vehículo ensayado **CUMPLE** con las prescripciones establecidas en el Artículo 25 del Reglamento (UE) 168/2013*2024/2847 relativo a la Homologación de Tipo UE de los vehículos de dos o tres ruedas y los cuatriciclos según se detalla en los informes parciales adjuntados a este informe / *The tested vehicle supplied by the manufacturer,* ***COMPLIES*** *with the requirements set out in Article 25 of Regulation (EU) 168/2013*2024/2847 on EU type-approval of two or three-wheel vehicles and quadricycles as detailed in the progress reports attached to this report.*

Realizado / *Performed by* :

Anpeng(apple) Li
INGENIERO DE HOMOLOGACIONES
HOMOLOGATION ENGINEER

Vº. Bº. / *Revised by* :

Josep Masip Gomez
JEFE DE DEPARTAMENTO
DEPARTMENT MANAGER

* LOS RESULTADOS PRESENTADOS SE REFIEREN ÚNICAMENTE A LA MUESTRA ENSAYADA /
THE PRESENTED RESULTS REFER ONLY TO THE TESTED SAMPLE

ANEXO AL INFORME / *ANNEX TO THE TEST REPORT*

IDENTIFICACIÓN DEL VEHÍCULO / *IDENTIFICATION OF THE VEHICLE*

Marca / *Make* (1)	:	JINMA, RUNHORSE
Tipo / *Type* (1)	:	TEV
Variantes/versiones / *Variants/versions* (1)	:	00/00, 00/01, 00/02, 01/00, 01/01, 01/02
Categoría, subcategoría y sub-subcategoría / *Category, subcategory and sub-subcategory*	:	L7e-CU
Fecha de recepción de la muestra / *Date sample received*	:	10.08.2024

(1) Información proporcionada por el cliente. El laboratorio no se hace responsable de dicha información / *Information provided by the client. The laboratory is not responsible for such information.*

LISTADO DE LOS ACTOS REGLAMENTARIOS QUE CUMPLE EL TIPO VEHÍCULO /
LIST OF REGULATORY ACTS WITH WHICH THE TYPE OF VEHICLE COMPLIES

Numero de ítem / *Item number*	Asunto / *Subject*	Núm. de homologación o núm. de informe / *Type-approval number or test report number*	Fecha de emisión de la homologación o del informe / *Date of issue of the type-approval or of the test report*	Estado miembro o parte contratante que emite la homologación o servicio técnico que emite el informe / *Member State or contracting party issuing the type-approval or technical service issuing the test report*	Referencia del acto reglamentario y su ultima modificación / *Reference to the regulatory act and its latest amendment*	Variante/ versión / *Variant/ version*	Informe base / *Base report*
A.	REQUISITOS DE EFICACIA MEDIOAMBIENTAL Y DE RENDIMIENTO DE LA UNIDAD DE PROPULSIÓN / *ENVIRONMENTAL AND PROPULSION UNIT PERFORMANCE REQUIREMENTS*						
1	Emisiones del tubo de escape tras un arranque en frio / *Tailpipe emissions after cold start*	N.A.	----	----	Reg. Delegado (UE) Nº / *Delegated Reg. (EU) No 134/2014*2023/2724 Annex II*	----	----
2	Emisiones del tubo de escape (al ralentí aumentado) o en aceleración libre / *Tailpipe emissions at (increased idle) / free acceleration test*	N.A.	----	----	Reg. Delegado (UE) Nº / *Delegated Reg. (EU) No 134/2014*2023/2724 Annex III*	----	----
3	Emisiones de gases del cárter / *Emissions crank-case gases*	N.A.	----	----	Reg. Delegado (UE) Nº / *Delegated Reg. (EU) No 134/2014*2023/2724 Annex IV*	----	----
4	Emisiones de evaporación / *Evaporative emissions*	N.A.	----	----	Reg. Delegado (UE) Nº / *Delegated Reg. (EU) No 134/2014*2023/2724 Annex V*	----	----
5	Durabilidad de los dispositivos de control de la contaminación / *Durability of pollution-control devices*	N.A.	----	----	Reg. Delegado (UE) Nº / *Delegated Reg. (EU) No 134/2014*2023/2724 Annex VI*	----	----

Numero de ítem / *Item number*	Asunto / *Subject*	Núm. de homologación o núm. de informe / *Type-approval number or test report number*	Fecha de emisión de la homologación o del informe / *Date of issue of the type-approval or of the test report*	Estado miembro o parte contratante que emite la homologación o servicio técnico que emite el informe / *Member State or contracting party issuing the type-approval or technical service issuing the test report*	Referencia del acto reglamentario y su ultima modificación / *Reference to the regulatory act and its latest amendment*	Variante/ versión / *Variant/ version*	Informe base / *Base report*
6	Medición de las emisiones de CO_2 consumo de combustible, consumo de energía eléctrica y determinación de la autonomía eléctrica / *Measurament of CO_2 emissions, fuel consumption, electric energy consumption and eletric range determination*	TEV/134/2014/VII	08.01.2025	IDIADA	Reg. Delegado (UE) Nº / *Delegated Reg. (EU) No 134/2014*2023/2724 Annex VII*	Todas / *All*	Ext.00
7	Ensayos medioambientales del diagnóstico a bordo (DAB) / *Environmental on-board diagnosis (OBD) tests*	N.A.	----	----	Reg. Delegado (UE) Nº / *Delegated Reg. (EU) No 134/2014*2023/2724 Annex VIII*	----	----
8	Nivel sonoro admisible / *Permissible sound level*	N.A.	----	----	Reg. Delegado (UE) Nº / *Delegated Reg. (EU) No 134/2014*2023/2724 Annex IX*	----	----
9	Velocidad máxima del vehículo por construcción, el par máximo, la potencia total continua máxima y la potencia de pico máxima / *Maximum vehicle design speed, maximum torque, maximum continuous total power and maximum peak power*	TEV/134/2014/X1 TEV/134/2014/X3	08.01.2025	IDIADA	Reg. Delegado (UE) Nº / *Delegated Reg. (EU) No 134/2014*2023/2724 Annex X*	Todas / *All*	Ext.00
10	Definición de la familia de vehículos y de propulsiones / *Vehicle propulsion family definition*	N.A.	----	----	Reg. Delegado (UE) Nº / *Delegated Reg. (EU) No 134/2014*2023/2724 Annex XI*	----	----
B.	REQUISITOS DE SEGURIDAD FUNCIONAL DE LOS VEHÍCULOS / *VEHICLE FUNCTIONAL SAFETY REQUIREMENTS*						

Numero de ítem / *Item number*	Asunto / *Subject*	Núm. de homologación o núm. de informe / *Type-approval number or test report number*	Fecha de emisión de la homologación o del informe / *Date of issue of the type-approval or of the test report*	Estado miembro o parte contratante que emite la homologación o servicio técnico que emite el informe / *Member State or contracting party issuing the type-approval or technical service issuing the test report*	Referencia del acto reglamentario y su ultima modificación / *Reference to the regulatory act and its latest amendment*	Variante/ versión / *Variant/ version*	Informe base / *Base report*
1	Avisadores acústicos / *Audible warning devices*	TEV/3/2014/II	08.01.2025	IDIADA	Reg. Delegado (UE) Nº / *Delegated Reg. (EU) No 3/2014*2016/1824 Annex II*	Todas / *All*	Ext.00
2	Frenado, incluidos los sistemas de frenado antibloqueo y los sistemas de frenado combinado / *Braking, including anti-lock and combined brake system*	TEV/3/2014/III	08.01.2025	IDIADA	Reg. Delegado (UE) Nº / *Delegated Reg. (EU) No 3/2014*2016/1824 Annex III*	Todas / *All*	Ext.00
3	Seguridad eléctrica / *Electric safety*	TEV/3/2014/IV	08.01.2025	IDIADA	Reg. Delegado (UE) Nº / *Delegated Reg. (EU) No 3/2014*2016/1824 Annex IV*	Todas / *All*	Ext.00
4	Requisitos aplicables a la declaración del fabricante sobre ensayos de durabilidad de los sistemas, piezas y equipos esenciales para la seguridad funcional / *Manufacturer declaration requirements regarding endurance testing of functional safety-critical systems, parts and equipment*	TEV/3/2014/V	08.01.2025	IDIADA	Reg. Delegado (UE) Nº / *Delegated Reg. (EU) No 3/2014*2016/1824 Annex V*	Todas / *All*	Ext.00
5	Estructuras de protección delanteras y traseras / *Front and rear protective structures*	N.A.	----	----	Reg. Delegado (UE) Nº / *Delegated Reg. (EU) No 3/2014*2016/1824 Annex VI*	----	----
6	Acristalamiento, limpiaparabrisas, lavaparabrisas y sistemas de desescarchado y de desempañado / *Glazing, windscreen wipers and washers, and defrosting and demisting systems*	TEV/3/2014/VII	08.01.2025	IDIADA	Reg. Delegado (UE) Nº / *Delegated Reg. (EU) No 3/2014*2016/1824 Annex VII*	Todas / *All*	Ext.00

* LOS RESULTADOS PRESENTADOS SE REFIEREN UNICAMENTE A LA MUESTRA ENSAYADA / *THE PRESENTED RESULTS REFER ONLY TO THE TESTED SAMPLE*

* QUEDA TERMINANTEMENTE PROHIBIDA LA REPRODUCCION PARCIAL DE ESTE INFORME SIN PERMISO EXPRESO DE IDIADA / *THE PARTIAL REPRODUCTION OF THIS REPORT WITHOUT THE PERMISSION OF IDIADA IS COMPLETELY FORBIDDEN*

* LA REGLA DE DECISIÓN UTILIZADA, SEGÚN LA NORMA ILAC-G8, HA SIDO LA DECLARACIÓN BINARIA DE ACEPTACIÓN SIMPLE / *THE DECISION RULE USED, ACCORDING TO THE ILAC-G8 STANDARD, WAS THE BINARY STATEMENT FOR SIMPLE ACCEPTANCE*

Numero de ítem / *Item number*	Asunto / *Subject*	Núm. de homologación o núm. de informe / *Type-approval number or test report number*	Fecha de emisión de la homologación o del informe / *Date of issue of the type-approval or of the test report*	Estado miembro o parte contratante que emite la homologación o servicio técnico que emite el informe / *Member State or contracting party issuing the type-approval or technical service issuing the test report*	Referencia del acto reglamentario y su ultima modificación / *Reference to the regulatory act and its latest amendment*	Variante/ versión / *Variant/ version*	Informe base / *Base report*
7	Mandos accionados por el conductor, con identificación de los mandos, los testigos y indicadores / *Driver-operated controls including indentification of controls, tell-tales and indicators*	TEV/3/2014/VIII	08.01.2025	IDIADA	Reg. Delegado (UE) Nº / *Delegated Reg. (EU) No 3/2014*2016/1824 Annex VIII*	Todas / *All*	Ext.00
8	Instalación de dispositivos de alumbrado y señalización luminosa, incluidos el encendido y apagado automáticos del alumbrado / *Installation of lighting and light-signalling devices, including automatic switching of lighting*	TEV/3/2014/IX	08.01.2025	IDIADA	Reg. Delegado (UE) Nº / *Delegated Reg. (EU) No 3/2014*2016/1824 Annex IX*	Todas / *All*	Ext.00
9	Visibilidad trasera / *Rearward visibility*	TEV/3/2014/X	08.01.2025	IDIADA	Reg. Delegado (UE) Nº / *Delegated Reg. (EU) No 3/2014*2016/1824 Annex X*	Todas / *All*	Ext.00
10	Estructura de protección en caso de vuelco (ROPS) / *Rollover protective structure (ROPS)*	N.A.	----	----	Reg. Delegado (UE) Nº / *Delegated Reg. (EU) No 3/2014*2016/1824 Annex XI*	----	----
11	Cinturones de seguridad y sus anclajes / *Safety-belt anchorages and safety-belts*	TEV/3/2014/XII	08.01.2025	IDIADA	Reg. Delegado (UE) Nº / *Delegated Reg. (EU) No 3/2014*2016/1824 Annex XII*	Todas / *All*	Ext.00
12	Plazas de asiento (sillines y asientos) / *Seating positions (saddles and seats)*	TEV/3/2014/XIII	08.01.2025	IDIADA	Reg. Delegado (UE) Nº / *Delegated Reg. (EU) No 3/2014*2016/1824 Annex XIII*	Todas / *All*	Ext.00

Numero de ítem / *Item number*	Asunto / *Subject*	Núm. de homologación o núm. de informe / *Type-approval number or test report number*	Fecha de emisión de la homologación o del informe / *Date of issue of the type-approval or of the test report*	Estado miembro o parte contratante que emite la homologación o servicio técnico que emite el informe / *Member State or contracting party issuing the type-approval or technical service issuing the test report*	Referencia del acto reglamentario y su ultima modificación / *Reference to the regulatory act and its latest amendment*	Variante/ versión / *Variant/ version*	Informe base / *Base report*
13	Maniobrabilidad, propiedades de giro en curva y capacidad de giro / *Steer-ability, cornering properties and turn-ability*	TEV/3/2014/XIV	08.01.2025	IDIADA	Reg. Delegado (UE) Nº / *Delegated Reg. (EU) No 3/2014*2016/1824 Annex XIV*	Todas / *All*	Ext.00
14	Instalación de neumáticos / *Installation of tyres*	TEV/3/2014/XV	08.01.2025	IDIADA	Reg. Delegado (UE) Nº / *Delegated Reg. (EU) No 3/2014*2016/1824 Annex XV*	Todas / *All*	Ext.00
15	Placa de limitación de la velocidad máxima del vehículo y su emplazamiento en el vehículo / *Vehicle maximum speed limitation plate and its location on the vehicle*	N.A.	----	----	Reg. Delegado (UE) Nº / *Delegated Reg. (EU) No 3/2014*2016/1824 Annex XVI*	----	----
16	Protección de los ocupantes del vehículo, incluidos el acondicionamiento interior y las puertas del vehículo / *Vehicle occupant protection, including interior fittings and vehicle doors*	TEV/3/2014/XVII	08.01.2025	IDIADA	Reg. Delegado (UE) Nº / *Delegated Reg. (EU) No 3/2014*2016/1824 Annex XVII*	Todas / *All*	Ext.00
17	Potencia nominal o neta continua máxima y/o limitación de la velocidad del vehículo por construcción / *Maximum continuous rated or net power and/or vehicle speed limitation by design*	TEV/3/2014/XVIII	08.01.2025	IDIADA	Reg. Delegado (UE) Nº / *Delegated Reg. (EU) No 3/2014*2016/1824 Annex XVIII*	Todas / *All*	Ext.00
18	Requisitos relativos a la integridad de la estructura del vehículo / *Requirements on vehicle structure integrity*	TEV/3/2014/XIX	08.01.2025	IDIADA	Reg. Delegado (UE) Nº / *Delegated Reg. (EU) No 3/2014*2016/1824 Annex XIX*	Todas / *All*	Ext.00
C1.	FABRICACIÓN DE VEHÍCULOS Y REQUISITOS GENERALES A LA HOMOLOGACIÓN DE TIPO / *VEHICLE CONSTRUCTION AND GENERAL TYPE-APPROVAL REQUIREMENTS*						

Numero de ítem / *Item number*	Asunto / *Subject*	Núm. de homologación o núm. de informe / *Type-approval number or test report number*	Fecha de emisión de la homologación o del informe / *Date of issue of the type-approval or of the test report*	Estado miembro o parte contratante que emite la homologación o servicio técnico que emite el informe / *Member State or contracting party issuing the type-approval or technical service issuing the test report*	Referencia del acto reglamentario y su ultima modificación / *Reference to the regulatory act and its latest amendment*	Variante/ versión / *Variant/ version*	Informe base / *Base report*
1	Medidas de prevención de la manipulación del grupo motopropulsor (antimanipulación) / *Powertrain tampering prevention measures (anti-tampering)*	TEV/44/2014/II	08.01.2025	IDIADA	Reg. Delegado (UE) Nº / *Delegated Reg. (EU) No 44/2014*2018/295 Annex II*	Todas / *All*	Ext.00
2	Disposiciones relativas a los procedimientos de homologación de tipo / *Arrangements for type-approval procedures*	De una sola vez / *Single step*	08.01.2025	IDIADA	Reg. Delegado (UE) Nº / *Delegated Reg. (EU) No 44/2014*2018/295 Annex III*	Todas / *All*	Ext.00
3	Conformidad de la producción / *Conformity of production*	TEV/44/2014/IV	08.01.2025	IDIADA	Reg. Delegado (UE) Nº / *Delegated Reg. (EU) No 44/2014*2018/295 Annex IV*	Todas / *All*	Ext.00
4	Dispositivos de acoplamiento y de fijación / *Coupling devices and attachments*	N.A.	----	----	Reg. Delegado (UE) Nº / *Delegated Reg. (EU) No 44/2014*2018/295 Annex V*	----	----
5	Dispositivos de protección contra la utilización no autorizada / *Devices to prevent unauthorised use*	TEV/44/2014/VI	08.01.2025	IDIADA	Reg. Delegado (UE) Nº / *Delegated Reg. (EU) No 44/2014*2018/295 Annex VI*	Todas / *All*	Ext.00
6	Compatibilidad electromagnética (CEM) / *Eletromagnetic compatibility (EMC)*	TEV/44/2014/VII	08.01.2025	IDIADA	Reg. Delegado (UE) Nº / *Delegated Reg. (EU) No 44/2014*2018/295 Annex VII*	Todas / *All*	Ext.00
7	Salientes exteriores / *External projections*	TEV/44/2014/VIII	08.01.2025	IDIADA	Reg. Delegado (UE) Nº / *Delegated Reg. (EU) No 44/2014*2018/295 Annex VIII*	Todas / *All*	Ext.00

Numero de ítem / *Item number*	Asunto / *Subject*	Núm. de homologación o núm. de informe / *Type-approval number or test report number*	Fecha de emisión de la homologación o del informe / *Date of issue of the type-approval or of the test report*	Estado miembro o parte contratante que emite la homologación o servicio técnico que emite el informe / *Member State or contracting party issuing the type-approval or technical service issuing the test report*	Referencia del acto reglamentario y su ultima modificación / *Reference to the regulatory act and its latest amendment*	Variante/ versión / *Variant/ version*	Informe base / *Base report*
8	Almacenamiento de combustible / *Fuel storage*	N.A.	----	----	Reg. Delegado (UE) Nº / *Delegated Reg. (EU) No 44/2014*2018/295 Annex IX*	----	----
9	Plataformas de carga / *Load platforms*	TEV/44/2014/X	08.01.2025	IDIADA	Reg. Delegado (UE) Nº / *Delegated Reg. (EU) No 44/2014*2018/295 Annex X*	Todas / *All*	Ext.00
10	Masas y dimensiones / *Masses and dimensions*	TEV/44/2014/XI	08.01.2025	IDIADA	Reg. Delegado (UE) Nº / *Delegated Reg. (EU) No 44/2014*2018/295 Annex XI*	Todas / *All*	Ext.00
11	Requisitos funcionales del diagnóstico a bordo (DAB) / *On-board diagnostics (OBD) functional requirements*	TEV/44/2014/XII	08.01.2025	IDIADA	Reg. Delegado (UE) Nº / *Delegated Reg. (EU) No 44/2014*2018/295 Annex XII*	Todas / *All*	Ext.00
12	Asideros y reposapiés para pasajeros / *Passenger handholds and footrests*	N.A.	----	----	Reg. Delegado (UE) Nº / *Delegated Reg. (EU) No 44/2014*2018/295 Annex XIII*	----	----
13	Espacio destinado a la placa de matrícula / *Registration plate space*	TEV/44/2014/XIV	08.01.2025	IDIADA	Reg. Delegado (UE) Nº / *Delegated Reg. (EU) No 44/2014*2018/295 Annex XIV*	Todas / *All*	Ext.00
14	Acceso a la información sobre la reparación y el mantenimiento / *Access to repair and maintenance information*	TEV/44/2014/XV	08.01.2025	IDIADA	Reg. Delegado (UE) Nº / *Delegated Reg. (EU) No 44/2014*2018/295 Annex XV*	Todas / *All*	Ext.00
15	Caballetes / *Stands*	N.A.	----	----	Reg. Delegado (UE) Nº / *Delegated Reg. (EU) No 44/2014*2018/295 Annex XVI*	----	----

Numero de ítem / *Item number*	Asunto / *Subject*	Núm. de homologación o núm. de informe / *Type-approval number or test report number*	Fecha de emisión de la homologación o del informe / *Date of issue of the type-approval or of the test report*	Estado miembro o parte contratante que emite la homologación o servicio técnico que emite el informe / *Member State or contracting party issuing the type-approval or technical service issuing the test report*	Referencia del acto reglamentario y su ultima modificación / *Reference to the regulatory act and its latest amendment*	Variante/ versión / *Variant/ version*	Informe base / *Base report*
15a	Requisitos de circularidad del imán permanente / *Permanent magnet circularity requirements*	----	----	----	Reg. (UE) 2024/1252 del Parlamento Europeo y Consejo / *Reg. (EU) 2024/1252 of the European Parliament and of Council*	----	----
16	Protección del vehiculo frente a ciberataques / *Protection of vehicle against cyberattacs*	----	----	----	----	----	----
D. REQUISITOS ADMINISTRATIVOS PARA LA HOMOLOGACIÓN Y LA VIGILANCIA DEL MERCADO / *ADMINISTRATIVE REQUIREMENTS FOR THE APPROVAL AND MARKET SURVEILLANCE*							
1	Placa reglamentaria y marca de homologación de tipo UE / *Statutory plate and EU type-approval mark*	TEV/901/2014/V	08.01.2025	IDIADA	Reg. de Ejecución (UE) Nº / *Implementing Reg. (EU) No 901/2014*2020/239 Annex V*	Todas / *All*	Ext.00

Lugar / *Place* : L'Albornar, Santa Oliva (Tarragona)
Fecha / *Date* : 08.01.2025

Anpeng(apple) Li
INGENIERO DE HOMOLOGACIONES
HOMOLOGATION ENGINEER

* LOS RESULTADOS PRESENTADOS SE REFIEREN UNICAMENTE A LA MUESTRA ENSAYADA / *THE PRESENTED RESULTS REFER ONLY TO THE TESTED SAMPLE*
* QUEDA TERMINANTEMENTE PROHIBIDA LA REPRODUCCION PARCIAL DE ESTE INFORME SIN PERMISO EXPRESO DE IDIADA / *THE PARTIAL REPRODUCTION OF THIS REPORT WITHOUT THE PERMISSION OF IDIADA IS COMPLETELY FORBIDDEN*
* LA REGLA DE DECISIÓN UTILIZADA, SEGÚN LA NORMA ILAC-G8, HA SIDO LA DECLARACIÓN BINARIA DE ACEPTACIÓN SIMPLE / *THE DECISION RULE USED, ACCORDING TO THE ILAC-G8 STANDARD, WAS THE BINARY STATEMENT FOR SIMPLE ACCEPTANCE*

APÉNDICE / *APPENDIX* TEV/134/2014/VII

REQUISITOS DEL ENSAYO DE TIPO VII: EMISIONES DE CO2, CONSUMO DE COMBUSTIBLE, CONSUMO DE ENERGÍA ELÉCTRICA Y AUTONOMÍA ELÉCTRICA /

TEST TYPE VII REQUIREMENTS: CO2 EMISSIONS, FUEL CONSUMPTION, ELETRIC ENERGY CONSUMPTION AND ELECTRIC RANGE

Reglamento Delegado (UE) / *Delegated Regulation (EU)* No. 134/2014/VII*2023/2724

IDENTIFICACIÓN DEL VEHÍCULO PRESENTADO AL ENSAYO /
IDENTIFICATION OF THE VEHICLE SUBMITTED FOR TEST

Marca / *Make* (1)	:	JINMA
Tipo / *Type* (1)	:	TEV
Variantes/versión ensayada / *Tested variants/version* (1)	:	00/01, 01/01
Variantes/Versiones cubiertas / *Covered Variants/Versions* (1)	:	00/00, 00/01, 00/02, 01/00, 01/01, 01/02
Categoría, subcategoría y sub-subcategoría / *Category, subcategory and sub-subcategory*	:	L7e-CU
Nº de bastidor / *Frame number*	:	Variant 00: R3W8AZKY3RA000002 Variant 01: R3W8AZKX4RA000002
Kilometraje / *Mileage*	:	Variant 00: 329 km, Variant 01: 4442 km
Fecha de recepción de la muestra / *Date sample received*	:	10.08.2024

ESPECIFICACIONES DEL VEHÍCULO / *SPECIFICACION OF THE VEHICLE*

- Motor / *Engine*

Marca / *Make* (1)	:	ROCK
Tipo/Nº motor / *Type/Engine No.*	:	Variant 00: TZ155XPS110B, Variant 01: TZ155MPS092
Corriente / *Current*	:	Alterna/~~Continua~~ / *Alternating*/~~*Direct*~~
Voltaje operativo / *Operating voltage*	:	63,4 V AC
Potencia neta continua máxima / *Maximum continuous rated power* (1)	:	Variant 00: 14,8 kW a / *at* 5100 min^{-1} Variant 01: 7,5 kW a / *at* 5900 min^{-1}
Modo de funcionamiento / *Operating mode*	:	Síncrono trifásico / *Synchronous three phases*

- Bateria / *Battery* (1)

Tipo / *Type*	:	Li-Ion
Cantidad / *Quantity*	:	1

(1) Información proporcionada por el cliente. El laboratorio no se hace responsable de dicha información /
Information provided by the client. The laboratory is not responsible for such information

Nº de celdas / *Nº of cells* : 28
Capacidad / *Capacity* : Variant 00: 230 Ah, Variant 01: 150 Ah
Tensión / *Voltage* : 89,6 V

- Cargador a bordo / *On-board charger*

Marca/Nº cargador / *Make/Charger No.* : JURRY / DSPC3K31AFA-SDJM06

- Caja de cambios / *Gearbox*

Tipo / *Type* : Automatic / *Automatic*
Relación final / *Final drive ratio* : Variant 00: 10,400, Variant 01: 12,603

- Velocidad máxima declarada / *Maximum declared speed* : Variant 00: 80 km/h, Variant 01: 65 km/h

- Neumáticos / *Tyres*

	Dimensiones / *Size*	Circunferencia de rodadura / *Rolling circumference* (mm)	Presión / *Pressure* (kPa)
Delantero / *Front*	175/65R14	1830	300
Trasero / *Rear*	175/65R14	1830	300

- Condiciones de carga del vehículo / *Load conditions of the vehicle*

Masa real del vehículo ensayado / *Actual mass of the tested vehicle* : Variant 00: 939 kg, Variant 01: 894 kg

Masa de referencia del vehículo / *Reference mass of the vehicle* : Variant 00: 939 kg, Variant 01: 894 kg

Masa de inercia equivalente / *Equivalent inertia mass* : Variant 00: 940 kg, Variant 01: 890 kg

VERIFICACIONES INICIALES / *INITIAL CHECKINGS*

Los dispositivos de alumbrado, señalización y auxiliares están apagados, excepto los necesarios para el ensayo y funcionamiento diurno habitual del vehículo / *The lighting, signalling and auxiliary devices be off, except those required for the testing and usual day- time operation of the vehicle* .....*CORRECT*

Todos los sistemas de almacenamiento de energía para fines distintos de la tracción han sido cargados al nivel máximo especificado por el fabricante / *All energy storage systems for other than traction purposes have been charged to their maximum level as specified by the manufacturer* .....*CORRECT*

En caso de que las baterías se pongan en funcionamiento a una temperatura superior a la temperatura ambiente, se aplica el procedimiento recomendado por el fabricante / *If the batteries are operated above the ambient temperature, the operator follows the procedure recommended by the vehicle manufacturer* .....*NOT APPLICABLE*

Distancia recorrida por el vehículo 7 días antes del ensayo / *Driven distance of the vehicle 7 days before the test* ≥ 300 km.....*CORRECT*

Se aplica el ciclo de ensayo correspondiente a / *Applies the test cycle corresponding to*: ~~R47~~ / WMTC stage 3 / ~~R40~~.....*CORRECT*

CONDICIONES DEL ENSAYO / *TEST CONDITIONS*

- Condiciones atmosféricas / *Atmospherical conditions*

Variant 00:

Ensayo / *Test*		Consumo eléctrico / *Electric consumption*	Autonomía eléctrica / *Electric range*
Temperatura / *Temperature*	:	25,7 ºC	27,0 ºC
Humedad relativa / *Relative humidity*	:	46,5 %	48,8 %
Presión barométrica / *Barometric pressure*	:	100,3 kPa	100,4 kPa

Variant 01:

Ensayo / *Test*		Consumo eléctrico / *Electric consumption*	Autonomía eléctrica / *Electric range*
Temperatura / *Temperature*	:	22,1 ºC	20,5 ºC
Humedad relativa / *Relative humidity*	:	68,9 %	65,4 %
Presión barométrica / *Barometric pressure*	:	101,6 kPa	102,1 kPa

- Tiempos de carga de batería y de ensayo / *Battery charge and test timing*

Variant 00:

Ensayo / *Test*		Consumo eléctrico / *Electric consumption*	Autonomía eléctrica / *Electric range*
Hora final de carga (T_0) / *End of charging time (T_0)*	:	19:01 (23.08.2024)	19:00 (24.08.2024)
Hora de inicio del ciclo *Driving start cycle time*	:	19:11 (23.08.2024)	19:30 (24.08.2024)
Hora final de la recarga (T_{end}) / *Charging stop time (T_{end})*	:	19:00 (24.08.2024)	---
Tiempo en carga / *Charge duration*	:	22h 59min	---

Variant 01:

Ensayo / *Test*		Consumo eléctrico / *Electric consumption*	Autonomía eléctrica / *Electric range*
Hora final de carga (T_0) / *End of charging time (T_0)*	:	19:03 (17.10.2024)	19:00 (18.10.2024)
Hora de inicio del ciclo *Driving start cycle time*	:	19:11 (17.10.2024)	19:17 (18.10.2024)
Hora final de la recarga (T_{end}) / *Charging stop time (T_{end})*	:	19:00 (18.10.2024)	---
Tiempo en carga / *Charge duration*	:	22h 57min	---

MEDICIÓN DEL CONSUMO DE ENERGÍA ELÉCTRICA / *MEASURING THE ELECTRIC ENERGY CONSUMPTION*

La carga inicial se ha llevado a cabo según el apéndice 2 del Anexo VII del Reglamento Delegado (UE) Nº 134/2014 / *Initial charge is carried out following the appendix 2 of Annex VII of Delegated Regulation (EU) No 134/2014* .....*CORRECT*

Se han realizado dos ensayos / ~~un ensayo y otro ensayo parcial~~ del tipo I en un banco dinamométrico / *Two test/~~One test and other partial test~~ have been carried out on a chassis dynamometer* .....*CORRECT*
Distancia recorrida (D_{test}) / *Distance covered (D_{test})* : Variant 00: 15,8 km, Variant 01: 15,1 km

Tiempos de ensayo de acuerdo con el Apéndice 2 de este Anexo / *Test timing according to Appendix 2 of this Annex* .....*CORRECT*

Resultados de ensayo variante 00 / *Test results variant 00:*

Energía de carga (E) durante la recarga de la batería / *Energy charge (E) during the battery* : 1390 Wh

Resultados de ensayo variante 01 / *Test results variant 01:*

Energía de carga (E) durante la recarga de la batería / *Energy charge (E) during the battery* : 1730 Wh

Consumo de la energía eléctrica (C) / *Electric energy consumption (C)*

Variants	00	01
Valor medido / *Measured value*	88 Wh/km	115 Wh/km
Valor declarado / *Declared value*	88 Wh/km	115 Wh/km
Diferencia / *Difference*	0 %	0 %

El consumo eléctrico declarado no es menor de un 4% al valor ensayado / *Declared electric consumption is not less than a 4% of the tested value* .....*CORRECT*

MEDICIÓN DE LA AUTONOMÍA ELÉCTRICA / *ELECTRIC RANGE MEASUREMENT*

La carga inicial se ha llevado a cabo según el apéndice 3.3 del Anexo VII del Reglamento Delegado (UE) Nº 134/2014 / *Initial charge is carried out following appendix 3.3 of Annex VII of Delegated Regulation (EU) No 134/2014*.....*CORRECT*

Hasta 3 interrupciones, de no más de 15 minutos en total / *Up to three interruptions, of no more than 15 minutes in total*.....*CORRECT*

Tiempos aplicados durante el ensayo de acuerdo con Apéndice 3.3 del Anexo VII del Reglamento Delegado (UE) Nº 134/2014 / *Test timing according to Appendix 3.3 of Annex VII to Delegated Regulation (EU) No 134/2014*.....*CORRECT*

Resultados de ensayo variante 00 / *Test results variant 00:*

Autonomía eléctrica (D_e) / *Electric range (D_e)*

Valor medido / *Measured value*	191 km
Valor declarado / *Declared value*	191 km

Observación / *Remark*: El vehículo se ha ensayado en el modo de conducción SPORT y modo regenerativo del freno en OFF / *The vehicle tested in SPORT riding mode and regenerative brake in OFF*

Resultados de ensayo variante 01 / *Test results variant 01:*

Autonomía eléctrica (D_e) / *Electric range (D_e)*

Valor medido / *Measured value*	151 km
Valor declarado / *Declared value*	151 km

Observación / *Remark*: El vehículo se ha ensayado en el modo de conducción SPORT. / *The vehicle tested in SPORT riding mode.*

DISPOSICIONES GENERALES DEL FABRICANTE / MANUFACTURER GENERAL PROVISIONS

El fabricante del vehículo garantiza que, en el momento de la compra de un vehículo nuevo, se facilitará al comprador los datos sobre emisiones de CO_2, consumo de combustible, consumo de energía eléctrica y autonomía eléctrica / *The vehicle manufacturer ensure that the CO_2 emissions, fuel consumption, electric energy consumption and electric range data are provided to the buyer of the vehicle at the time of purchase of a new vehicle*.....*CORRECT*

Se adjunta a la ficha de características un ejemplar completo del formato de presentación de los resultados de los ensayos de tipo VII utilizado para informar al comprador del vehículo nuevo / *A completed specimen of the test type VII result format used to inform the buyer of the new vehicle is added to the information document* .....*NOT APPLICABLE*

EQUIPO DE ENSAYO / *TEST EQUIPMENT*

Banco de rodillos / *Roller bench*:

Marca/Modelo / *Make/Model*	:	Angqin
Tipo / *Type*	:	AVL110kW
Diametro / *Diameter*	:	648 mm

Driver's aid y sistema de adquisición de datos /
Driver's aid and data logger:

Marca/Modelo / *Make/Model*	:	HORIBA / VETS ONE

Lugar del ensayo / *Test place*	:	CVTRI, Chongqing (China)
Fecha del ensayo / *Test date*	:	23~24.08 y / *and* 17~18.10.2024

Anpeng(apple) Li
INGENIERO DE HOMOLOGACIONES
HOMOLOGATION ENGINEER

APÉNDICE / *APPENDIX* TEV/134/2014/X1

PROCEDIMIENTOS DE ENSAYO Y REQUISITOS TÉCNICOS CON RESPECTO A LA EFICACIA DE LA UNIDAD DE PROPULSIÓN / *TESTING PROCEDURES AND TECHNICAL REQUIREMENTS AS REGARDS PROPULSION UNIT PERFORMANCE*

REQUISITOS RELATIVOS AL MÉTODO DE MEDICIÓN DE LA VELOCIDAD MÁXIMA POR CONSTRUCCIÓN DEL VEHÍCULO / *REQUIREMENTS CONCERNING THE METHOD FOR MEASURING THE MAXIMUM DESIGN VEHICLE SPEED*

Reglamento Delegado (UE) / *Delegated Regulation (EU)* No. 134/2014/X*2023/2724

IDENTIFICACIÓN DEL VEHÍCULO PRESENTADO AL ENSAYO / *IDENTIFICATION OF THE VEHICLE SUBMITTED FOR TEST*

Marca / *Make* [(1)]	:	JINMA
Tipo / *Type* [(1)]	:	TEV
Variantes/Versión ensayada / *Tested variants/Version* [(1)]	:	00/01, 01/01
Variantes/Versione cubiertas / *Covered variants/Version*	:	00/00, 00/01, 00/02, 01/00, 01/01, 01/02
Categoría y subcategoría / *Category and subcategory*	:	L7e-CU
Nº de bastidor / *Frame number*	:	Variant 00: R3W8AZKY3RA000002 Variant 01: R3W8AZKX4RA000002
Fecha de recepción de la muestra / *Date sample received*	:	10.08.2024

[(1)] Información proporcionada por el cliente. El laboratorio no se hace responsable de dicha información / *Information provided by the client. The laboratory is not responsible for such information*

ESPECIFICACIONES DEL VEHÍCULO / *SPECIFICATIONS OF THE VEHICLE*

- Motor / *Engine*

Marca / *Make*	:	ROCK
Tipo / *Type*	:	Variant 00: TZ155XPS110B, Variant 01: TZ155MPS092
Corriente / *Current*	:	Alterna/~~Continua~~ / *Alternating*/~~*Direct*~~
Tensión de trabajo / *Operating voltage*	:	63,4 V AC
Unidad de control del motor eléctrico / *Electric motor control unit*	:	Variant 00: ROCK / KTZ09X40PS1048 Variant 01: ROCK / KTZ09M45PS560

- Baterías / *Batteries*

Tipo / *Type*	:	Li-Ion
Cantidad / *Quantity*	:	1
Nº de celdas / *No. of cells*	:	28
Capacidad / *Capacity*	:	Variant 00: 230 Ah, Variant 01: 150 Ah
Tensión / *Voltage*	:	89,6 V, DC

- Transmisión / *Transmission*

Tipo / *Type*	:	Automatic / *Automatic*
Relación final / *Final drive ratio*	:	Variant 00: 10,400, Variant 01: 12,603

- Velocidad máxima declarada / *Maximum declared speed* : Variant 00: 80 km/h, Variant 01: 65 km/h

- Neumáticos / *Tyres*

	Dimensiones / *Size*	Presión / *Pressure* (kPa)
Delantero / *Front*	175/65R14	300
Trasero / *Rear*	175/65R14	300

- Condiciones de carga del vehículo / *Load conditions of the vehicle*:

Variant 00:

	P.O.M. / *M.R.O.*(*) (kg)	Masa real / *Actual mass* (kg)
Delantero / *Front*	547	578
Trasero / *Rear*	258	361
TOTAL	805	939

(*) P.O.M. + masa baterías (vehiculo eléctrico) / *M.R.O. + mass of batteries (electric vehicle)*

Variant 01:

	P.O.M. / *M.R.O.*(*) (kg)	Masa real / *Actual mass* (kg)
Delantero / *Front*	545	588
Trasero / *Rear*	215	306
TOTAL	760	894

(*) P.O.M. + masa baterías (vehiculo eléctrico) / *M.R.O. + mass of batteries (electric vehicle)*

CONDICIONES DEL ENSAYO / *TEST CONDITIONS*

Temperatura / *Temperature*	:	31,3 ºC
Humedad / *Humidity*	:	71,5 %
Presión atmosférica / *Barometric pressure*	:	100,7 kPa
Viento / *Wind*	:	1,0 m/s (W-E)
Tipo de ensayo / *Test type*	:	Type 1
Sentido de marcha / *Direction*	:	S-N
Marcha utilizada / *Gear used*	:	---

RESULTADOS DEL ENSAYO / *TEST RESULTS*

Variant 00:

Sentido / *Direction*	V_1	V_2	$V_{sent/direc}$	$V_{med/aver}$	% Diff.	V_{max}
S-N	80,1	80,6	80,35	80,85	0,09	80,85
N-S	81,0	81,7	81,35			
S-N	80,3	80,2	80,25	80,78		
N-S	80,8	81,8	81,30		0,03	80,78
S-N	79,7	80,6	80,15	80,75		
N-S	81,0	81,6	81,35			

Variant 01:

Sentido / *Direction*	V_1	V_2	$V_{sent/direc}$	$V_{med/aver}$	% Diff.	V_{max}
S-N	66,7	66,4	66,55	66,35	0,23	66,50
N-S	65,9	66,4	66,15			
S-N	66,3	66,5	66,40	66,50		
N-S	66,8	66,4	66,60		0,38	66,50
S-N	65,8	66,4	66,10	66,25		
N-S	66,3	66,5	66,40			

RESULTADO FINAL / *FINAL RESULT*

Variant 00:

Velocidad ensayada / *Tested speed*	81 km/h
Velocidad declarada / *Specified speed*	80 km/h
Diferencia / *Difference* (< 5%)	1,3 %

Variant 01:

Velocidad ensayada / *Tested speed*	67 km/h
Velocidad declarada / *Specified speed*	65 km/h
Diferencia / *Difference* (< 5%)	3,1 %

Lugar del ensayo / *Test place* : CVTRI, Chongqing (China)
Fecha del ensayo / *Test date* : 22.10.2024

Anpeng(apple) Li
INGENIERO DE HOMOLOGACIONES
HOMOLOGATION ENGINEER

APÉNDICE / *APPENDIX* TEV/134/2014/X3

PROCEDIMIENTOS DE ENSAYO Y REQUISITOS TÉCNICOS CON RESPECTO A LA EFICACIA DE LA UNIDAD DE PROPULSIÓN / *TESTING PROCEDURES AND TECHNICAL REQUIREMENTS AS REGARDS PROPULSION UNIT PERFORMANCE*

REQUISITOS RELATIVOS A LOS MÉTODOS DE MEDICIÓN DEL PAR MÁXIMO Y LA POTENCIA NOMINAL CONTINUA MÁXIMA DE UN TIPO DE PROPULSIÓN ELÉCTRICA PURA / *REQUIREMENTS CONCERNING THE METHODS FOR MEASURING THE MAXIMUM TORQUE AND MAXIMUM CONTINUOUS RATED POWER OF A PURE ELECTRIC PROPULSION TYPE*

Reglamento Delegado (UE) / *Delegated Regulation (EU)* No. 134/2014/X*2023/2724

IDENTIFICACIÓN DEL TIPO DE VEHICULO AL QUE SE INSTALA EL GRUPO MOTOPROPULSOR / *IDENTIFICATION OF THE TYPE OF VEHICLE TO WHICH THE DRIVE TRAIN IS INSTALLED*

Marca / *Make* (1)	:	JINMA
Tipo / *Type* (1)	:	TEV
Variante/Versión / *Variant/Version* (1)	:	00/00, 01/00
Categoría y subcategoría / *Category and subcategory*	:	L7e-CU
Fecha de recepción de la muestra / *Date sample received*	:	16.10.2024

IDENTIFICACIÓN DE LA UNIDAD DE PROPULSIÓN PRESENTADA AL ENSAYO / *IDENTIFICATION OF THE PROPULSION UNIT SUBMITTED FOR TEST*

Motor ensayado / *Tested motor*

Marca / *Make* (1)	:	ROCK
Código / *Code*	:	Variant 00: TZ155XPS110B, Variant 01: TZ155MPS092
Número motor / *Motor No.*	:	Variant 00: JMPAPSDM00133, Variant 01: JMR4PSDM00001
Principio de funcionamiento / *Working principle*	:	Imán permanente sin escobillas / *Brushless permanent magnet*
Tensión nominal / *Nominal voltage*	:	63,4 V AC

Especificaciones del grupo motopropulsor / *Specification of the electric drive train*

Marca / *Make* (1)	:	ROCK
Código / *Code*	:	Variant 00: TZ155XPS110B, Variant 01: TZ155MPS092
Principio de funcionamiento / *Working principle*	:	Imán permanente sin escobillas / *Brushless permanent magnet*
Control de potencia / *Power control*	:	---

Unidad de control del motor eléctrico / *Electric motor control unit*	:	Variant 00: ROCK / KTZ09X40PS1048 Variant 01: ROCK / KTZ09M45PS560
Potencia neta máxima estimada / *Estimated maximum net power* (1)	:	Variant 00: 19,0 kW a / *at* 4800 min^{-1} Variant 01: 10,0 kW a / *at* 5300 min^{-1}
Régimen máximo del eje motor / *Motor crankshaft maximum speed* (1)	:	Variant 00: 7600 min^{-1}, Variant 01: 7900 min^{-1}
Sistema de refrigeración / *Cooling system*	:	Por aire / *Air cooled*
Tensión nominal de ensayo / *Nominal test voltage*	:	89,6 V ± 5 %
Eficiencia de la caja de cambios o reductora / *Gear-box or reducer efficiency*	:	No aplicable / *Not applicable*
Potencia absorbida por accesorios no desmontables / *Power absorbed by non-removable accessories*	:	No aplicable / *Not applicable*

Condiciones de ensayo / *Test conditions*

Banco de ensayo / *Test bench*	:	CHENGBANG / DL15
Fuente de corriente DC / *DC voltage source*	:	Sí / *Yes*
Ventilación auxiliar en banco ensayo / *Bench test auxiliary fan*	:	Si / *Yes*
Temperatura al inicio de ensayo / *Temperature at start of tests*	:	28 ºC
Temperatura al final de ensayo / *Temperature at end of tests*	:	28 ºC

(1) Información proporcionada por el cliente. El laboratorio no se hace responsable de dicha información / *Information provided by the client. The laboratory is not responsible for such information*

RESULTADOS DEL ENSAYO DE POTENCIA NETA / *NET POWER TEST RESULTS*

Precondicionamiento térmico de 2 horas / *2 hour thermal preconditioning* .....*CORRECT*

3 minutos de funcionamiento al 80% de la potencia máxima estimada / *3 minutes running at 80% of max. estimated power*.....*CORRECT*

Mediciones de la curva de potencia / *Power curve measurements*.....*CORRECT*

Variant 00:

Nº / *No*	Velocidad / *Speed* (min^{-1})	Par / *Torque* (N·m)	Potencia / *Power* (kW)	Tensión / *Voltage* (V)	Temp. motor / *engine* (ºC)
1	7542	0,4	0,35	89,7	26,8
2	7326	11,9	9,15	89,7	26,9
3	7221	17,9	13,56	89,7	27,0
4	6873	20,2	14,54	89,7	27,0
5	6537	23,8	16,32	89,6	27,1
6	6375	25,7	17,16	89,6	27,1
7	5991	28,7	17,98	89,6	27,1
8	5475	31,3	17,97	89,6	27,1
9	5352	33,3	18,64	89,5	27,1
10	5022	35,8	18,85	89,5	27,1
11	4767	38,0	18,95	89,5	27,2
12	4182	42,1	18,45	89,5	27,2
13	3735	46,6	18,24	89,5	27,2
14	3390	51,2	18,16	89,5	27,2
15	3117	55,9	18,26	89,5	27,2
16	2886	59,9	18,10	89,5	27,2
17	2685	64,8	18,22	89,4	27,2
18	2505	69,3	18,19	89,4	27,2
19	2343	73,7	18,08	89,4	27,3
20	2214	77,9	18,07	89,4	27,3
21	2097	82,3	18,06	89,4	27,3
22	1992	86,2	17,98	89,4	27,3
23	1746	98,1	17,94	89,4	27,3
24	1605	106,7	17,93	89,4	27,4
25	1329	110,6	15,39	89,4	27,4

Variant 01:

Nº / *No*	Velocidad / *Speed* (min^{-1})	Par / *Torque* (N·m)	Potencia / *Power* (kW)	Tensión / *Voltage* (V)	Temp. motor / *engine* (ºC)
1	7872	2,7	2,21	89,6	27,7
2	7596	6,3	5,00	89,6	27,7
3	7263	10,4	7,89	89,6	27,8
4	6948	11,8	8,55	89,6	27,8
5	6630	13,2	9,18	89,6	27,9
6	6336	14,3	9,48	89,6	27,9
7	6156	14,8	9,57	89,6	27,9
8	5919	15,6	9,69	89,6	28,0
9	5697	16,6	9,88	89,6	28,0
10	5436	17,5	9,94	89,6	28,0
11	5283	18,4	10,19	89,6	28,0
12	5064	19,0	10,08	89,5	28,0
13	4812	19,7	9,94	89,5	28,0
14	4629	20,3	9,86	89,5	28,0
15	4419	21,0	9,73	89,5	28,0
16	4257	21,4	9,54	89,5	28,1
17	4146	21,9	9,52	89,5	28,1
18	3966	22,4	9,30	89,5	28,1
19	3762	23,2	9,12	89,5	28,1
20	3594	23,9	9,00	89,5	28,1
21	3369	25,3	8,91	89,4	28,1
22	3174	27,0	8,98	89,4	28,1
23	2949	28,6	8,83	89,4	28,1
24	2706	29,4	8,33	89,4	28,1
25	2436	30,7	7,83	89,4	28,2
26	2292	31,6	7,58	89,4	28,2
27	1965	32,4	6,66	89,4	28,2
28	1536	33,1	5,32	89,4	28,2
29	1212	34,0	4,31	89,4	28,2
30	987	34,6	3,57	89,4	28,3
31	753	34,8	2,74	89,4	28,3

Ensayo completado en 5 minutos / *Whole test completed within 5 minutes*.....*CORRECT*

RESULTADOS DE ENSAYO DE LA POTENCIA MÁXIMA EN 30 MINUTOS /
MAXIMUM 30 MINUTES POWER TEST RESULTS

Potencia máxima en 30 minutos estimada /
Estimated maximum 30 minutes power : Variant 00: 14,8 kW, Variant 01: 7,5 kW

Rango flexible >90% pot. máx. /
Flexible range >90% max. power : Variant 00: 1605 a / *to* 6375 min^{-1}
Variant 01: 3966 a / *to* 6630 min^{-1}

Precondicionamiento térmico de 4 horas / *4 hour thermal preconditioning* .....*CORRECT*

Mediciones de la potencia / *Power measurements*.....*CORRECT*

Variant 00:

Nº / *No*	Tiempo (seg) / *Time (sec)*	Velocidad / *Speed* (min^{-1})	Par / *Torque* (N·m)	Potencia / *Power* (kW)	Tensión / *Voltage* (V)	Temp. motor / *engine* (ºC)
1	Inicio/*Start*	5124	27,6	14,81	89,6	29,6
2	120	5126	27,5	14,76	89,6	30,9
3	240	5125	27,6	14,81	89,6	32,2
4	360	5128	27,6	14,82	89,5	33,2
5	480	5120	27,6	14,80	89,5	34,3
6	600	5122	27,6	14,80	89,4	35,5
7	720	5120	27,6	14,80	89,4	36,8
8	840	5129	27,5	14,77	89,3	38,1
9	960	5126	27,6	14,81	89,3	39,1
10	1080	5124	27,6	14,81	89,3	40,2
11	1200	5128	27,6	14,82	89,3	41,4
12	1320	5124	27,7	14,86	89,2	42,3
13	1440	5128	27,6	14,82	89,2	43,4
14	1560	5125	27,5	14,76	89,2	44,5
15	1680	5128	27,5	14,77	89,2	45,3
16	1800	5124	27,6	14,81	89,2	46,7

Variant 01:

Nº / *No*	Tiempo (seg) / *Time (sec)*	Velocidad / *Speed* (min^{-1})	Par / *Torque* (N·m)	Potencia / *Power* (kW)	Tensión / *Voltage* (V)	Temp. motor / *engine* (ºC)
1	Inicio/*Start*	5940	12,1	7,50	89,5	26,8
2	120	5934	12,1	7,54	89,5	28,4
3	240	5922	12,1	7,48	89,5	29,7
4	360	5925	12,1	7,50	89,5	31,0
5	480	5937	12,1	7,50	89,4	32,7
6	600	5934	12,1	7,49	89,4	34,3
7	720	5937	12,1	7,52	89,4	36,0
8	840	5940	12,1	7,50	89,4	37,5
9	960	5928	12,1	7,51	89,3	39,2
10	1080	5922	12,1	7,50	89,3	40,9
11	1200	5934	12,1	7,49	89,3	42,3
12	1320	5934	12,1	7,54	89,3	43,8
13	1440	5934	12,1	7,52	89,3	45,4
14	1560	5940	12,1	7,50	89,2	47,1
15	1680	5937	12,1	7,52	89,2	49,1
16	1800	5925	12,1	7,50	89,2	50,7

RESULTADO FINAL / *FINAL RESULT*

Variant 00:

RESULTADOS / *RESULTS*	Valor medido / *Measured value*	Valor declarado / *Declared value*
Potencia neta máxima / *Maximum net power*	19,0 kW	18,95 kW
Régimen de potencia neta máxima / *Maximum net power engine speed*	4800 min^{-1}	4767 min^{-1}
Par nominal continuo máximo (30 minutos) / *Maximum continuous-rated torque (30 minutes)*	27,0 N.m	27,6 N.m
Régimen del par nominal continuo máx. (30 minutos)/ *Max. conrtinuous-rated torque speed (30 minutes)*	5100 min^{-1}	5125 min^{-1}
Potencia nominal continua máxima (30 minutos) / *Maximum continuous-rated power (30 minutes)*	14,8 kW	14,80 kW
Régimen de potencia nominal continua máx. (30 minutos) / *Max. continuous-rated power engine speed (30 minutes)*	5100 min^{-1}	5125 min^{-1}

Variant 01:

RESULTADOS / *RESULTS*	Valor declarado / *Declared value*	Valor medido / *Measured value*
Potencia neta máxima / *Maximum net power*	10,0 kW	10,19 kW
Régimen de potencia neta máxima / *Maximum net power engine speed*	5300 min^{-1}	5283 min^{-1}
Par nominal continuo máximo (30 minutos) / *Maximum continuous-rated torque (30 minutes)*	12,1 N.m	12,1 N.m
Régimen del par nominal continuo máx. (30 minutos)/ *Max. conrtinuous-rated torque speed (30 minutes)*	5900 min^{-1}	5933 min^{-1}
Potencia nominal continua máxima (30 minutos) / *Maximum continuous-rated power (30 minutes)*	7,5 kW	7,51 kW
Régimen de potencia nominal continua máx. (30 minutos) / *Max. continuous-rated power engine speed (30 minutes)*	5900 min^{-1}	5933 min^{-1}

TOLERANCIA / *TOLERANCE*

La potencia máxima neta, la potencia máxima durante 30 minutos y el régimen del motor ensayado difieren en menos de un 2 % de los valores especificados por el fabricante y en menos de un 4 % para el resto de medidas / *The maximum net power, the maximum 30 minutes power of the tested engine and the engine speed differ by less than a 2 % of the values specified by the manufacturer and less than 4 % for the other measurement points*

EQUIPO DE ENSAYO / *TEST EQUIPMENT*

Dinamómetro / *Dynamometer*

Marca / *Make*	:	CHENGBANG
Modelo / *Model*	:	DL15
Tipo / *Type*	:	---

Lugar del ensayo / *Test place* : CVTRI, Chongqing (China)
Fecha del ensayo / *Test date* : 17.10.2024

Anpeng(apple) Li
INGENIERO DE HOMOLOGACIONES
HOMOLOGATION ENGINEER

APÉNDICE / *APPENDIX* TEV/3/2014/II

PROCEDIMIENTOS DE ENSAYO Y REQUISITOS DE RENDIMIENTO APLICABLES A LOS AVISADORES ACÚSTICOS / *TEST PROCEDURES AND PERFORMANCE REQUIREMENTS APPLYING TO AUDIBLE WARNING DEVICES*

Reglamento Delegado (UE) / *Delegated Regulation (EU)* No 3/2014/II*2016/1824

IDENTIFICACIÓN DEL VEHÍCULO PRESENTADO AL ENSAYO / *IDENTIFICATION OF THE VEHICLE SUBMITTED FOR TEST*

Marca / *Make* [1]	:	JINMA
Tipo / *Type* [1]	:	TEV
Variantes/versiones ensayadas / *Tested variants/versions* [1]	:	00/01
Variantes/versiones cubiertas / *Covered variants/versions*	:	00/00, 00/01, 00/02, 01/00, 01/01, 01/02
Categoría, subcategoría y sub-subcategoría / *Category, subcategory and sub-subcategory*	:	L7e-CU
Nº de bastidor / *Frame number*	:	R3W8AZKY3RA000002
Fecha de recepción de la muestra / *Date sample received*	:	10.08.2024

DATOS DEL AVISADOR ACÚSTICO / *AUDIBLE WARNING DEVICE DATA*

Marca de fábrica / *Trade mark*	:	OSSCA
Tipo/Modelo / *Type/Model*	:	DL137-12V
Contraseña de homologación / *Type-approval number*	:	E9*28R00/05*1457*01
Nº de avisadores acústicos / *Numberof audible warning devices*	:	1
Tensión nominal / *Nominal voltage*	:	12 V (DC)

CONDICIONES DEL ENSAYO / *TEST CONDITIONS*

Temperatura / *Temperature*		:	32,2 ºC
Humedad / *Humidity*		:	61,1 %
Velocidad y dirección del viento / *Speed and direction of the wind*		:	1,0 m/s (W-E)
Presión barométrica / *Barometric pressure*		:	100,1 kPa
Calibración del sonómetro / *Sound-level meter calibration*	Initial	:	94,0 dB(A)
	Final	:	94,0 dB(A)
Ruido ambiente / *Background noise*		:	61,2 dB(A)
Posición relativa del vehículo / *Relative vehicle position*		:	7 m

[1] Información proporcionada por el cliente. El laboratorio no se hace responsable de dicha información / *Information provided by the client. The laboratory is not responsible for such information*

RESULTADOS DEL ENSAYO / *TEST RESULTS*

Nivel sonoro máximo entre 0.5 m y 1.5 m del suelo /
Maximum sound level between 0.5 m and 1.5 m from ground: 95,0 dB(A).....*CORRECT*

Nivel sonoro máximo / *Maximum sound level* : 95 dB(A) a / *at* 1,07 m .....*CORRECT*

Límites del nivel sonoro medido: mínimo ÷ máximo /
Limits of sound level measured: minimum ÷ maximum

- Ciclomotores / *Mopeds* (Cat. L1e-B, L2e and L6e): 75 ÷ 112 dB(A)

Nota / *Remark*: Cat. L1e-A; L1e-B ≤ 500 W y / *and* Velocidad / *Speed* ≤ 25 km/h no aplican este requisito / *not apply this requirement*

- Motocicletas y triciclos / *motorcycles and tricycles*: $P_{máx} \leq 7$ kW: 83 ÷ 112
- Motocicletas y triciclos / *motorcycles and tricycles*: $P_{máx} > 7$ kW: 87 ÷ 112

Nota / *Remark*: Aplicable también a las categorías M y N / *Also applicable to categories M and N*

Lugar del ensayo / *Test place* : CVTRI, Chongqing (China)
Fecha del ensayo / *Test date* : 21.08.2024

Anpeng(apple) Li
INGENIERO DE HOMOLOGACIONES
HOMOLOGATION ENGINEER

APÉNDICE / *APPENDIX* TEV/3/2014/III

REQUISITOS APLICABLES AL FRENADO, INCLUIDOS LOS SISTEMAS DE FRENADO ANTIBLOQUEO Y SISTEMAS DE FRENADO COMBINADO / *REQUIREMENTS APPLYING TO BRAKING, INCLUDING ANTI-LOCK AND COMBINED BRAKING SYSTEMS*

Reglamento Delegado (UE) / *Delegated Regulation (EU)* No. 3/2014/III*2016/1824

IDENTIFICACIÓN DEL VEHÍCULO PRESENTADO AL ENSAYO / *IDENTIFICATION OF THE VEHICLE SUBMITTED FOR TEST*

Marca / *Make* (1)	:	JINMA
Tipo / *Type* (1)	:	TEV
Variantes/versiones ensayadas / *Tested variants/versions*	:	00/01
Variantes/versiones cubiertas / *Covered variants/versions*	:	00/00, 00/01, 00/02, 01/00, 01/01, 01/02
Categoría, subcategoría y sub-subcategoría / *Category, subcategory and sub-subcategory*	:	L7e-CU
Nº de bastidor / *Frame number*	:	R3W8AZKY3RA000002
Fecha de recepción de la muestra / *Date sample received*	:	10.08.2024

- Condiciones de carga del vehículo / *Load conditions of the vehicle*:

	Carga ligera (2) / Lightly loaded (kg)	Carga / *Laden* (kg)	Carga ligera ABS (3) / *Lightly loaded ABS* (kg)
Delantero / *Front axle*	587	743	596
Posterior / *Rear axle*	367	861	373
TOTAL	954	1604	969

(2) Carga ligera = Peso en orden de marcha + conductor (75 kg) + equipos opcionales y de ensayo (15 kg) + baterías de propulsión en caso de vehículos eléctricos / Lightly loaded = *Mass in running order + driver (75kg) + optional and test equipment (15 kg) + propulsion batteries in case of electric vehicles*

(3) Carga ligera ABS = Peso en orden de marcha + conductor (75 kg) + equipos opcionales y de ensayo (30 kg) + baterías de propulsión en caso de vehículos eléctricos / *Lightly loaded ABS = Mass in running order + driver (75kg) + optional and test equipment (30 kg) + propulsion batteries in case of electric vehicles*

- Motor

Fabricante / *Manufacturer* (1)	:	ROCK
Tipo/Nº motor / *Type/Engine No.*	:	TZ155XPS110B / JMPAPSDM00133
Cilindrada / *Cylinder capacity* (1)	:	---
Voltaje de operación / *Operating voltage*	:	63,4 V AC
Unidad de control del motor eléctrico / *Electric motor control unit*	:	ROCK / KTZ09X40PS1048
Controlador de potencia / *Power controller*	:	---

- Caja de cambio / *Gearbox* [1]

  Tipo / *Type* : Automatic / *Automatic*

  Nº velocidades / *No. of gear ratios* : ---

- Relaciones de cambio / *Gear ratios* [1]

  Poleas / *Pulleys* : ---

  Engranajes / *Gears* : ---

  Relación final / *Final drive ratio* : 10,400

[1] Información proporcionada por el cliente. El laboratorio no se hace responsable de dicha información / *Information provided by the client. The laboratory is not responsible for such information*

- Velocidad máxima declarada por el fabricante / *Maximum speed declared by manufacturer* : 80 km/h

- Neumáticos / *Tyres*

	Dimensiones / *Size* (mm)	Presión / *Pressure* (kPa)
Delantero / *Front*	175/65R14	300
Trasero / *Rear*	175/65R14	300

- Descripción del sistema de frenos / *Braking device description* :

  Freno de servicio hidráulico tipo split actuado por pedal y freno de estacionamiento de accionamiento mecánico por palanca / *Hydraulic split service brake system actuated by foot pedal and mrchanical parking brake actuated by hand lever.*

  Eje delantero / *Front axle*: Dos discos de freno ø 258 mm de accionamiento hidráulico, pinza con 2 pistones ø 51,1 mm. *Equipped with anti-lock device controlled through ECU modulator. / Two brake discs ø 258 mm hidraulically actuated, caliper with 2 pistons ø 51,1 mm. Equipped with anti-lock device controlled through ECU modulator*

  Eje trasero / *Rear axle* : Dos discos de freno ø 257 mm de accionamiento hidráulico con 2 pistones ø34 mm. *Equipped with anti-lock device controlled through ECU modulator / Two brake discs ø 257 mm hidraulically actuated, caliper with 2 pistons ø 34 mm. Equipped with anti-lock device controlled through ECU modulator*

- Pastillas y zapatas de freno / *Brake pads and shoes*

  Las pastillas de freno no deben contener amianto / *Brake linings shall not contain asbestos*.....*CORRECT*

  Delantero / *Front* : HNBY / 3501EAC

  Trasero / *Rear* : HNBY / 79,8*36*9,5

- Requisitos de la bomba principal del sistema de frenos hidráulicos / *Master cylinder of hydraulic brake system requirements*:

  Depósito tapado, sellado y separado para cada sistema de frenado / *Sealed, covered, separate reservoir for each brake system* .....*CORRECT*

  Depósito con capacidad mínima equivalente a 1,5 veces del fluido total requerido para satisfacer el desgaste máximo de las pastillas / *Minimum reservoir capacity equivalent to 1.5 times the total fluid displacement required to satisfy the new to fully worn lining condition* .....*CORRECT*

  Nivel del depósito visible sin quitar la tapa / *Reservoir fluid level visible without remove the cover*.....*CORRECT*

- Señal de frenada de emergencia / *Emergency braking signal*

  La señal de frenada de emergencia es generada por medio de las luces indicadoras de dirección o luz de frenado / *The emergency braking stop signal is generated by means of direction indicators lamps / stop lamp* .....*NOT APPLICABLE*

  Criterios de activación / *Activation criteria*

  La señal no es activada por debajo de una deceleración de 6 m/s^2 a no ser que el ABS esté ciclando completamente, en tal caso la señal podrá ser activada si la deceleración es de al menos 2,5 m/s^2 siempre que la velocidad del vehículo sea superior a 50 km/h / *Signal is not activated below an acceleration of 6 m/s^2 unless the ABS is fully cycling, in such case the signal can be activated if the deacceleration is at least 2,5 m/s^2 being the vehicle speed more than 50 km/h.*.....*NOT APPLICABLE*

  Criterio de desactivación / *Deactivation criteria*

  La señal será desactivada siempre que la deceleración sea inferior a 2,5 m/s^2 o el ABS deje de ciclar / *Signal shall be deactivated when the deacceleration has fallen below 2,5 m/s^2 or the ABS is no longer fully cycling* .....*NOT APPLICABLE*

- Condiciones de desactivación del ABS / *ABS disabling conditions*:

  El vehículo tiene un modo de conducción "off-road" o "all terrain" / *Vehicle has a selectable "off-road" or "all-terrain" riding mode* .....*NOT APPLICABLE*

  La desactivación del ABS solo se permite en las siguientes condiciones / *Disablement is only permitted under the following conditions*:

  El vehículo está parado / *Vehicle is stationary* .....*NOT APPLICABLE*

  La desactivación del ABS será una de las siguientes acciones deliberada por el conductor / *ABS disablement shall be one of the following deliberate actions by the rider*:

  Aplicación simultánea del botón de ABS y del pedal o maneta de freno / *Simultaneous action of the ABS on/off switch and brake pedal or lever*.....*NOT APPLICABLE*

  Aplicación del botón de ABS durante al menos dos segundos / *Action of the ABS on/off switch during at least 2 seconds*.....*NOT APPLICABLE*

  Un mínimo de dos acciones consecutivas en el menú del selector del ABS / *At least two successive actions on the selector ABS menu* .....*NOT APPLICABLE*

  Solo es posible desactivar el ABS con el modo de conducción "off-road" o "all-terrain" / *Disabling of ABS is only allowed when the riding mode selector is in the "off-road" or "all-terrain"*.....*NOT APPLICABLE*

  Activación automática del ABS cada vez que el vehículo se ponga en marcha / *ABS automatically activated after each start-up of the vehicle*.....*NOT APPLICABLE*

Testigo específico o testigo ABS está continuamente encendido (parpadeando o encendido) cuando el ABS está desactivado / *Specific tell-tale or ABS tell-tale continuously activated (lit or flashing) when the ABS is deactivated* .....*NOT APPLICABLE*

Inexistencia de un dispositivo para reducir los requisitos de la desactivación del ABS / *No presence of defeat device to reduce the ABS disabling requirements*.....*NOT APPLICABLE*

Reactivación instantánea del ABS /*Instantaneous re-enablement of ABS*.....*NOT APPLICABLE*

El vehículo incorpora un modo de seleccionable que desactiva el ABS del eje posterior / *The vehicle is fitted with a selectable mode which deactivates the ABS function on the rear axle* .....*NOT APPLICABLE*

Se indica a través de un testigo amarillo o ámbar, o un mensaje de acuerdo al punto 5.1.18 ~~(i), (ii), (iii),~~ (iv), ~~(v)~~ [(4)] / *It is indicated by means of a yellow or amber tell-tale, or a message according to item 5.1.18 ~~(i), (ii), (iii),~~ (iv), ~~(v)~~* [(4)] .....*NOT APPLICABLE*

[(4)] Tachar cuando no proceda / Strike out when not applicable

Observación / *Remark*: El vehículo no incorpora ningún sistema de desactivación del ABS / *The vehicle is not fitted with ABS disabling system.*

- Vehículo eléctrico equipado con freno regenarativo / *Electric vehicle fitted with a regenerative braking*

  La señal de freno puede ser generada si la deceleración es ≤ 1,3 m/s^2
  Braking signal may be generated if the deacceleration is ≤ 1,3 m/s^2.....*NOT APPLICABLE*

  La señal de freno deberá ser generada si la deceleración es > 1,3 m/s^2
  Braking signal shall be generated if the deacceleration is > 1,3 m/s^2.....*NOT APPLICABLE*

CONDICIONES DEL ENSAYO / *TEST CONDITIONS*

Temperatura / *Temperature*	:	26,9 °C
Humedad / *Humidity*	:	60,6 %
Velocidad del Viento / *Wind speed*	:	1,7 m/s (W-E)
Dirección de marcha / *Direction*	:	S-N
Lugar de ensayo / *Test zone*	:	ISO standard testing field

RESULTADOS DE ENSAYO / *TEST RESULTS*

- Pulir / *Burnish*

  Temperatura inicial del freno ≤ 100 ºC / *Initial brake temperature ≤ 100 ºC*.....*CORRECT*

  100 frenadas con el sistema de freno tipo split, con deceleraciones entre 3.5 y 4.0 m/s^2 / *100 brake stops with the split service brake system, with decelerations between 3.5 and 4.0 m/s^2* .....*CORRECT*

  Observaciones / *Remarks*: El fabricante aporta evidencias del procedimiento de Burnish de acuerdo con lo establecido en el punto 2.5. del Anexo 3 del Reglamento UN Nº 78R05/01 / *The manufacturer provides the Burnish procedure evidences according to the prescriptions stated on item 2.5. to Annex 3 to UN RegulationNo. 78R05/01.*

- Frenada en seco con la acción de cada control de frenado individualmente / *Dry stop with single brake control action*

  Temperatura inicial del freno entre 55º C y 100º C / *Initial brake temperature between 55º C and 100º C*.....*CORRECT*

Pruebas en carga / *Laden vehicle tests*

	V (km/h)	MFDD (m/s²)	F (N)
Split	60,9	5,92	128
Sistema secundario (si aplica) / *Secondary system (if applicable)*	/	/	/

Los resultados cumplen los requisitos establecidos por el Reglamento /
The results comply with the requirements established by the Regulation .....*CORRECT*

Vehículo ligeramente cargado / *Vehicle lightly loaded*

	V (km/h)	MFDD (m/s²)	F (N)
Split	60,4	6,47	112

Los resultados cumplen los requisitos establecidos por el Reglamento /
The results comply with the requirements established by the Regulation .....*CORRECT*

- Frenada en seco con la acción de todos los controles de frenado /
  D*ry stop with all service brake controls actuated*

  Temperatura inicial del freno entre 55 ºC y 100 ºC /
  Initial brake temperature between 55 ºC and 100 ºC.....*CORRECT*

Vehículo ligeramente cargado / *Vehicle lightly loaded*

	V (km/h)	S (m)	F_1 (N)	F_2 (N)
Ambos frenos / Both brakes	73,0	26,90	129	---

F_1: Fuerza en el freno de servicio / *Force on service brake*
F_2: Fuerza en freno secundario (si aplica) / *Force on secundary brake (if applicable)*

- Ensayo a alta velocidad / *High speed test*

Vehículo ligeramente cargado / *Vehicle lightly loaded*.....*NOT APPLICABLE* (*)

(*) La velocidad máxima del vehículo es ≤ 125 km/h y por lo tanto el ensayo no es aplicable /
High speed of the vehicle is ≤ 125 km/h therefore the test is not applicable.

	V (km/h)	S (m)	MFDD (m/s²)	F_1 (N)	F_2 (N)
Ambos frenos / *Both brakes*	/	/	/	/	/

F_1: Fuerza en el freno de servicio / *Force on service brake*
F_2: Fuerza en freno secundario (si aplica) / *Force on secundary brake (if applicable)*

Los resultados cumplen los requisitos establecidos por el Reglamento /
The results comply with the requirements established by the Regulation.....*NOT APPLICABLE*

- Ensayo con frenos mojados / *Wet brake test*

  Temperatura inicial del freno entre 55 ºC y 100 ºC /
  Initial brake temperature between 55 ºC and 100 ºC.....*CORRECT*

  Freno de servicio Split / *Service brake Split*

  Pruebas en carga / *Laden vehicle tests*

	V (km/h)	d_{avg} (m/s^2) *	d_{max} (m/s^2) **	d_i (m/s^2) ***	F_{avg} (N)****
Media de referencia / *Baseline average*	60,6	2,70	4,45	2,53	58
Prueba mojado / *Wet test*	60,7	2,36	4,85	2,14	58

(*) Deceleración media / *Average deceleration*
(**) Deceleración máxima del vehículo durante la frenada excluyendo los últimos 0,5 segundos / *Maximum vehicle deceleration during the complete stop but excluding the final 0,5 seconds*
(***) Deceleración media en el periodo de 0,5 a 1,0 segundos después de la actuación del comando de freno / *Average deceleration in the period 0,5 to 1,0 seconds after de point of actuation of the brake control*
(****) Fuerza media del comando de freno medida entre el 80 % y el 10 % de la velocidad de ensayo especificada / *Average brake control force measured between the 80 per cent and the 10 per cent of the specified test speed*

Vehículo ligeramente cargado / *Vehicle lightly loaded*

	V (km/h)	d_{avg} (m/s^2) *	d_{max} (m/s^2) **	d_i (m/s^2) ***	F_{avg} (N)****
Media de referencia / *Baseline average*	60,6	2,79	4,05	2,60	49
Prueba mojado / *Wet test*	60,9	2,41	4,53	2,02	48

(*) Deceleración media / *Average deceleration*
(**) Deceleración máxima del vehículo durante la frenada excluyendo los últimos 0.5 segundos / *Maximum vehicle deceleration during the complete stop but excluding the final 0.5 seconds*
(***) Deceleración media en el periodo de 0.5 a 1.0 segundos después de la actuación del comando de freno / *Average deceleration in the period 0.5 to 1.0 seconds after de point of actuation of the brake control*
(****) Fuerza media del comando de freno medida entre el 80 % y el 10 % de la velocidad de ensayo especificada / *Average brake control force measured between the 80 per cent and the 10 per cent of the specified test speed*

Los resultados cumplen los requisitos establecidos por el Reglamento /
The results comply with the requirements established by the Regulation.....*CORRECT*

- Ensayo de pérdida de eficacia / *Heat fade test*

  Freno de servicio Split / *Service brake Split*

  Pruebas en carga / *Laden vehicle tests*

	V (km/h)	S (m)	MFDD (m/s^2)	F (N)
Referencia / *Baseline*	60,9	23,50	5,92	128
Ensayo en caliente / *Hot test*	60,6	29,50	4,71	126

Los resultados cumplen los requisitos establecidos por el Reglamento /
The results comply with the requirements established by the Regulation.....*CORRECT*

- Ensayo freno de estacionamiento / *Parking brake test*

  Inmoviliza el vehículo en una pendiente del 18 % /
  The parking brake halts the vehicle stationary on a 18% gradient ..... *CORRECT*

- Dispositivo antibloqueo (si aplica) / *anti-lock device (if applicable)*

  Características del sistema / *Characteristics of the system*

  Activación del testigo obligatorio en caso de fallo del dispositivo antibloqueo /
  Activation of the mandatory tell-tale in case of ABS failure ..... *CORRECT*

  Coeficiente de adherencia / *Peak braking coefficient (PBC)*:

  Alta adherencia / *High friction* = 0,93 (*) ..... *CORRECT*

  (*) Coeficiente de adherencia obtenido según el método ASTM / *Peak braking coefficient obtained according ASTM method*

  Baja adherencia / *Low friction* = 0,35 (*) ..... *CORRECT*

  (*) Coeficiente de adherencia obtenido según el Anexo 3 Apéndice 1 / *Peak braking coefficient obtained according to Annex 3 Appendix 1*

  Ninguna perturbación por las interferencias electromagnéticas / *No-affection by electro-magnetic fields* (E13*10R06/01*15749) ..... *CORRECT*

  Frenadas en una superficie de alta fricción / *Stops on a high friction surface*

  Temperatura inicial del freno entre 55º C y 100º C /
  Initial brake temperature between 55º C and 100º C ..... *CORRECT*

  MFDD ≥ 6,17 ..... *CORRECT*

  Vehículo ligeramente cargado / *Vehicle lightly loaded*

	V (km/h)	S (m)	MFDD (m/s^2)	F_1 (N)	F_2 (N)
Ambos frenos / *Both brakes*	60,0	/	8,70	799	/

F_1: Fuerza en el freno de servicio / *Force on service brake*
F_2: Fuerza en freno secundario (si aplica) / *Force on secundary brake (if applicable)*

  Los resultados cumplen los requisitos establecidos por el Reglamento /
  The results comply with the requirements established by the Regulation ..... *CORRECT*

  Frenadas en una superficie de baja fricción / *Stops on a low friction surface*

  Temperatura inicial del freno entre 55º C y 100º C /
  Initial brake temperature between 55º C and 100º C ..... *CORRECT*

  MFDD ≥ 6,87 x PBC ..... *CORRECT*

  Vehículo ligeramente cargado / *Vehicle lightly loaded*

	V (km/h)	S (m)	MFDD (m/s^2)	F_1 (N)	F_2 (N)
Ambos frenos / *Both brakes*	60,0	/	2,93	604	/

F_1: Fuerza en el freno de servicio / *Force on service brake*
F_2: Fuerza en freno secundario (si aplica) / *Force on secundary brake (if applicable)*

  Los resultados cumplen los requisitos establecidos por el Reglamento /
  The results comply with the requirements established by the Regulation ..... *CORRECT*

Comprobación de bloqueo de ruedas / *Wheel lock check*

El antibloqueo no se bloquea sobre una superficie de baja o alta adherencia, y las ruedas del vehículo se mantienen dentro de la pista de ensayo / *Anti-lock device doesn't lock on low or high adhesion surface, and the vehicle wheels stay within the test lane*.....*CORRECT*

El antibloqueo no se bloquea pasando de una superficie de baja adherencia a una superficie de alta adherencia, y las ruedas del vehículo se mantienen dentro de la pista de ensayo. Durante el primer segundo después de que la rueda trasera supere el punto de transición entre la baja y alta adherencia, la deceleración se incrementa / *Anti-lock device doesn't lock passing from a low adhesion surface to a high adhesion surface, and the vehicle wheels stay within the test lane. Within 1 second of the rear wheel passing the transition point between the low and high adhesion surfaces the deceleration is being increased*.....*CORRECT*

El antibloqueo no se bloquea pasando de una superficie de alta adherencia a una superficie de baja adherencia, y las ruedas del vehículo se mantienen dentro de la pista de ensayo / *Anti-lock device doesn't lock passing from a high adhesion surface to a low adhesion surface, and the vehicle wheels stay within the test lane*.....*CORRECT*

Frenadas con fallo eléctrico del ABS / *Stops with ABS electrical failure*

Temperatura inicial del freno entre 55 ºC y 100 ºC /
Initial brake temperature between 55 ºC and 100 ºC.....*CORRECT*

Pruebas en carga / *Laden vehicle tests*

	V (km/h)	S (m)	MFDD (m/s^2)	F (N)
Split	60,6	/	5,19	123
Sistema secundario / *Secondary system*	/	/	/	/

Los resultados cumplen los requisitos establecidos por el Reglamento /
The results comply with the requirements established by the Regulation.....*CORRECT*

Vehículo ligeramente cargado / *Vehicle lightly loaded*

	V (km/h)	S (m)	MFDD (m/s^2)	F (N)
Split	60,8	/	5,80	72

- Ensayo de fallo parcial para sistemas tipo split / *Partial failure test for split service brake systems*

  Temperatura inicial del freno entre 55 ºC y 100 ºC /
  Initial brake temperature between 55 ºC and 100 ºC.....*CORRECT*

  Vehículo ligeramente cargado / *Vehicle lightly loaded*

  Subsistema 1 / *Subsystem 1*

No.	V (km/h)	S (m)	MFDD (m/s²)	S_{LIM} (m)	F (N)
1	50,6	24,50	3,95	/	136
2	62,6	38,70	4,07	/	145

  Subsistema 2 / *Subsystem 2*

No.	V (km/h)	S (m)	MFDD (m/s²)	S_{LIM} (m)	F (N)
1	50,2	22,90	4,21	/	143
2	63,6	36,90	4,28	/	150

- Sistema de frenado asistido para el sistema de frenado para sistemas de frenos de servicio split /
  Power assisted braking system failure test for split service brake systems

  Vehículo ligeramente cargado / *Vehicle lightly loaded*

	V (km/h)	MFDD (m/s²)	F (N)
Split	58,9	3,07	130

  Pruebas en carga / *Laden vehicle tests*

	V (km/h)	MFDD (m/s²)	F (N)
Split	59,8	2,95	141

Lugar del ensayo / *Test place* : CVTRI, Chongqing (China), CNMTC, Tianjin (China)(ABS)
Fecha del ensayo / *Test date* : 21.09.2024, 25.10.2024(ABS)

Anpeng(apple) Li
INGENIERO DE HOMOLOGACIONES
HOMOLOGATION ENGINEER

APÉNDICE / *APPENDIX* TEV/3/2014/IV

REQUISITOS RELATIVOS A LA SEGURIDAD ELÉCTRICA /
REQUIREMENTS REGARDING ELETRICAL SAFETY

Reglamento Delegado (UE) / *Delegated Regulation (EU)* No. 3/2014/IV*2016/1824

IDENTIFICACIÓN DEL VEHÍCULO PRESENTADO AL ENSAYO /
IDENTIFICATION OF THE VEHICLE SUBMITTED FOR TEST

Marca / *Make* (1)	:	JINMA
Tipo / *Type* (1)	:	TEV
Variantes/versiones ensayadas / *Tested variants/versions* (1)	:	00/01, 01/01
Variantes/versiones cubiertas / *Covered variants/versions*	:	00/00, 00/01, 00/02, 01/00, 01/01, 01/02
Categoría, subcategoría y sub-subcategoría / *Category, subcategory and sub-subcategory*	:	L7e-CU
Nº de bastidor / *Frame number*	:	Variant 00: R3W8AZKY3RA000002 Variant 01: R3W8AZKX4RA000002
Fecha de recepción de la muestra / *Date sample received*	:	10.08.2024

(1) Información proporcionada por el cliente. El laboratorio no se hace responsable de dicha información / *Information provided by the client. The laboratory is not responsible for such information*

- Motor / *Engine*

Fabricante / *Manufacturer*	:	ROCK
Tipo / *Type*	:	Variant 00: TZ155XPS110B, Variant 01: TZ155MPS092
Potencia máxima / *Maximum power*	:	Variant 00: 19,0 kW a / *at* 4800 min^{-1} Variant 01: 10,0 kW a / *at* 5300 min^{-1}
Corriente / *Current*	:	Alterna/~~Continua~~ / *Alternating*/~~*Direct*~~
Tensión de trabajo / *Operating voltage*	:	63,4 V AC
Unidad de control del motor eléctrico / *Electric motor control unit*	:	Variant 00: ROCK / KTZ09X40PS1048 Variant 01: ROCK / KTZ09M45PS560
Control de potencia / *Power control*	:	---

- Baterías / *Batteries*

Tipo / *Type*	:	Li-Ion
Cantidad / *Quantity*	:	1
Nº de celdas / *No. of cells*	:	28
Capacidad / *Capacity*	:	Variant 00: 230 Ah / 89,6V, Variant 01: 150 Ah / 89,6V
Tensión / *Voltage*	:	89,6V

PROTECCIÓN CONTRA CHOQUES ELÉCTRICOS / *PROTECTION AGAINST ELECTRICAL SHOCK*

Contacto Directo / *Direct Contact*

Grado de protección IPXXD dentro del habitáculo cerrado para pasajeros y del compartimento para equipajes / *IPXXD protection degree inside the enclosed passenger's compartment as well as luggage compartment* .....*CORRECT*

Grado de protección IPXXB en zonas distintas del habitáculo cerrado / *IPXXB protection degree in areas other than the enclosed compartment* .....*CORRECT*

Grado de protección IPXXD en vehículos que no dispone de un habitáculo cerrado / *IPXXD protection degree in vehicles where no enclosed compartment is present* .....*NOT APPLICABLE*

Conectores / *Connectors*.....*CORRECT*

Grado de protección IPXXB en la desconexión del servicio sin utilizar herramientas / *IPXXB protection degree in the service disconnect without the use of tools*.....*CORRECT*

Marcado / *Marking* .....*CORRECT*

Contacto indirecto / *Indirect Contact*

Resistencia entre las piezas conductoras expuestas y el chasis eléctrico < 0.1 Ω para I > 0.2 A / *Resistance between exposed conductive parts and electrical chassis < 0.1 Ω for I > 0.2 A* .....*CORRECT*

Conexión a tierra del dispositivo de acoplamiento a la red / *Ground connection of the external power supply coupling device* .....*CORRECT*

Resistencia de aislamiento / *Insolation resistance*

En grupos motopropulsores eléctricos de buses CC y CA separados / *In electric power trains of separate DC or AC-buses* .....*CORRECT*

En un grupo motopropulsor eléctrico de buses CC y CA combinados / *In an electric power train of combined DC- and AC-buses*.....*CORRECT*

Vehículos provistos de pila de combustible / *Fuel cell vehicles* .....*NOT APPLICABLE*

Sistema de acoplamiento para cargar el REESS / *Coupling system for charging the REESS*.....*CORRECT*

REQUISITOS RELATIVOS AL REESS / *REQUIREMENTS CONCERNING THE REESS*

Protección en caso de corriente excesiva / *Protection in case of excessive current* .....*CORRECT*

Prevención de la acumulación de gas / *Prevention of accumulation of gas* .....*NOT APPLICABLE*

Protección contra vertidos de electrólito / *Protection against electrolyte spills* .....*NOT APPLICABLE*

Desprendimiento accidental o no intencionado /
Accidental or unintentional detachment .....*CORRECT*

REQUISITOS DE SEGURIDAD EN USO / *IN-USE SAFETY REQUIREMENTS*

Procedimiento de encendido y apagado del sistema de propulsión /
Propulsion system power-on and power-off procedure .....*CORRECT*

Conducción con potencia reducida / *Driving with reduced power* .....*CORRECT*

Conducción marcha atrás / *Driving backwards* .....*CORRECT*

Determinación de las emisiones de hidrógeno /
Determination of hydrogen emissions .....*NOT APPLICABLE*

Lugar del ensayo / *Test place* : CVTRI, Chongqing (China)
Fecha del ensayo / *Test date* : 20.08.2024

Anpeng(apple) Li
INGENIERO DE HOMOLOGACIONES
HOMOLOGATION ENGINEER

APÉNDICE / *APPENDIX* TEV/3/2014/V

REQUISITOS APLICABLES A LA DECLARACIÓN DEL FABRICANTE SOBRE LOS ENSAYOS DE DURABILIDAD DE LOS SISTEMAS CRÍTICOS PARA LA SEGURIDAD FUNCIONAL, PIEZAS Y EQUIPOS / *REQUIREMENTS APPLYING TO MANUFACTURERS' DECLARATION REGARDING ENDURANCE TESTING OF FUNCTIONAL SAFETY CRITICAL SYSTEMS, PARTS AND EQUIPMENT*

Reglamento Delegado (UE) / *Delegated Regulation (EU)* No 3/2014/V*2016/1824

IDENTIFICACIÓN DEL VEHÍCULO / *IDENTIFICATION OF THE VEHICLE*

Marca / *Make*	:	JINMA
Tipo / *Type*	:	TEV
Variantes/Versiones / *Variants/Versions*	:	00/00, 00/01, 00/02, 01/00, 01/01, 01/02
Categoría y subcategoría / *Category and subcategory*	:	L7e-CU
Velocidad máxima declarada / *Maximum declared speed*	:	Variant 00: 80 km/h, Variant 01: 65 km/h

La declaración del fabricante está de acuerdo con el artículo 22, apartado 2 y el anexo VIII del Reglamento (UE) Nº 168/2013 / *Manufacturer's statement is in conformity with Article 22(2) and Annex VIII to Regulation (EU) No 168/2013*

La distancia de uso normal para la categoría L7e-C es de 30000 km / *Normal distance of use for this category L7e-C is at least 30000 km*

La declaración del fabricante se entiende realizada sin perjuicio de sus obligaciones de prestación de garantía al propietario del vehículo / *The manufacturer's statement is without prejudice to its warranty obligations towards the owner of the vehicle*

Ver declaración del fabricante en la información del fabricante / *See manufacturer declaration in the information document*

Lugar / *Place* : Hongkong, China
Fecha / *Date* : 31.10.2024

Anpeng(apple) Li
INGENIERO DE HOMOLOGACIONES
HOMOLOGATION ENGINEER

APÉNDICE / *APPENDIX* TEV/3/2014/VII

CRISTALES, LIMPIAPARABRISAS Y LAVAPARABRISAS Y SISTEMAS DE DESESCARCHADO Y DESEMPAÑADO / *GLAZING, WINDSCREEN WIPERS AND WASHERS, AND DESFROSTING AND DEMISTING SYSTEMS.*

Reglamento Delegado (UE) / *Delegated Regulation (EU)* No. 3/2014/VII*2016/1824

IDENTIFICACIÓN DEL VEHÍCULO PRESENTADO AL ENSAYO / *IDENTIFICATION OF THE VEHICLE SUBMITTED FOR TEST*

Marca / *Make* [1]	:	JINMA
Tipo / *Type* [1]	:	TEV
Variantes/versiones ensayadas / *Tested variants/versions* [1]	:	00/01
Variantes/versiones cubiertas / *Covered variants/versions*	:	00/00, 00/01, 00/02, 01/00, 01/01, 01/02
Categoría, subcategoría y sub-subcategoría / *Category, subcategory and sub-subcategory*	:	L7e-CU
Nº de bastidor / *Frame number*	:	R3W8AZKY3RA000002
Fecha de recepción de la muestra / *Date sample received*	:	10.08.2024

[1] Información proporcionada por el cliente. El laboratorio no se hace responsable de dicha información / *Information provided by the client. The laboratory is not responsible for such information*

DATOS DE LOS CRISTALES / *GLAZING DATA*

CRISTALES / *GLAZING*	Marca / *Trade mark*	Contraseña / *Approval mark*	Clase / *Class*
Parabrisas / *Windscreen*		E24 43R-010118	II
Puerta delantera izquierda / *Front left door*	/	/	/
Puerta delantera derecha / *Front right door*	/	/	/
Ventana delantera izquierda / *Front left window*		E24 43R-010116	II
		E24 43R-010026	III
		E13 43R-019765	II

CRISTALES / *GLAZING*	Marca / *Trade mark*	Contraseña / *Approval mark*	Clase / *Class*
Ventana delantera derecha / *Front right window*		E24 43R-010116	II
		E24 43R-010026	III
		E13 43R-019765	II
Cristal trasero / *Rear glazing*		E24 43R-010116	II
		E24 43R-010026	III
		E13 43R-019765	II

PARABRISAS / *WINDSCREEN*

Marcaje del cristal (contraseña y símbolo) / *Appropiate component type-approval mark followed by the additional symbol* .....*CORRECT*

Instalado de manera que, durante condiciones normales de uso, se mantenga en su posición y ofrezca visibilidad y seguridad / *Fitted in such a way that, under normal operating conditions, it remains in position and continues to afford visibility and safety*.....*CORRECT*

Parabrisas diferentes a los templados aceptados para vehículos con velocidad máxima mayor de 40 km/h / *Vehicles having a maximum design speed greater than 40 km/h may not be fitted with a toughened windscreen* .....*CORRECT*

Homologado para el tipo de vehículo en que está instalado / *Windscreen approved for the type of vehicle wich is fitted* .....*CORRECT*

Instalación en relación al punto R del vehículo / *The windscreen is correctly fitted with reference to the vehicle R point*.....*CORRECT*

CRISTALES LATERALES Y TRASEROS / *GLAZING OTHER THAN WINDSCREENS*

Marcaje de los cristales (contraseña y símbolo) / *Appropiate component type-approval mark followed by the additional symbol* .....*CORRECT*

Instalado de manera que, durante condiciones normales de uso, se mantenga en su posición y ofrezca visibilidad y seguridad / *Fitted in such a way that, under normal operating conditions, it remains in position and continues to afford visibility and safety* .....*CORRECT*

Los cristales de plástico en el campo de visión hacia adelante están marcados con el simbolo /A/L / *Plastic safety glazing in the forward field of vision bears symbol /A/L* .....*NOT APPLICABLE*

Los cristales de plástico en el campo de visión hacia atrás podran ser rigidos (marcaje no necesario) o flexibles (con marcaje IX) / *Plastic safety glazing in the rearward field of vision can be rigids (marking not necessary) or flexible (with IX marking) bears symbol A/L or B/L* .....*NOT APPLICABLE*

Otros cristales con transmitancia inferior a 70% marcados con el simbolo V / *Other safety glazingwith transmittance below 70% marked with symbol V*.....*NOT APPLICABLE*

Los símbolos adicionales /C/L o /C/M no están permitidos para emplazamientos con riesgo de impacto con la cabeza / *Glazing with the additional symbols /C/L or /C/M are not allowed at locations where there is a risk of head impact*.....*NOT APPLICABLE*

En vehículos de velocidad máxima superior a 40 km/h cualquier cristal de Seguridad orientado hacia adelante diferente del parabrisas deberá ser laminado o de plástico con el símbolo /A / *Any forward-facing glazing other than a windscreen must be constituted either by laminated glass or a plastic pane bearing the additional symbol /A for vehicles with design speed higher than 40 km/h*.....*NOT APPLICABLE*

LIMPIAPARABRISAS / *WINDSCREEN WIPERS*

Identificación del dispositivo presentado al ensayo / *Identification of the device submitted for test*

Marca de fábrica / *Make or trade name*	:	Shenghuabo
Tipo del dispositivo / *Device type*	:	JM1020EV-5201300

Requisitos generales / *General requirements*

La(s) escobilla(s) se separa(n) del parabrisas / *The wiper arm folds back from the windscreen*.....*CORRECT*

Funcionamento automático desde la posición de conducción / *The device operates automatically without any intervention by the driver other than that necessary in order to start and stop the windscreen wiper* .....*CORRECT*

Funcionamiento después del bloqueo de las escobillas 15 segundos / *The windscreen wiper withstand stalling for a continuous period of 15 seconds*.....*CORRECT*
The windscreen wiper arms restrained in their vertical position and the control set at the maximum sweep frequency

Frecuencia de barrido / *Sweep frequency*

Frecuencia de barrido después de un funcionamiento de 20 min. /
Sweep frequency after an operating period on a wet surface of 20 min. :
xx ≥ 40 ciclos por minuto / *cycles per minute* .....*CORRECT*

Zona de visión / *Field of vision*

Actúa sobre el 90% como mínimo de la zona de visión /
The device covers at least 90 % of the field of vision A.....*CORRECT*

Funcionamiento en seco / *Operating on a dry windscreen*

Funcionamiento del dispositivo durante 2 min. /
The windscreen wiper operates for 2 minutes on a dry windscreen .....*CORRECT*

LAVAPARABRISAS / *WINDSCREEN WASHERS*

Identificación del dispositivo presentado al ensayo / *Identification of the device submitted for test*

Marca de fábrica / *Make or trade name*	:	XINGSHUN
Referencia / *Reference*	:	JM1020EV-5101100
Tipo de dispositivo / *Device type*	:	Depósito de plástico translucido con bomba de 12 V CC/ *Translucent plastic tank with 12 V DC pump*

Requisitos generales / *General requirements*

Capacidad del depósito / *Capacity of the liquid bottle*: 1,2 liter ≥ 1 liter.....*CORRECT*

Ensayos del dispositivo lavaparabrisas / *Windscreen washer tests*

- Ensayo de eficacia / *Windscreen washer efficiency test* .....*CORRECT*
- Ensayo de presión por obstrucción /
  Withstand the loadings resulting from blocked jets.....*CORRECT*
- Ensayo de exposición a bajas temperaturas /
  Test involving exposure to low temperatures .....*CORRECT*
- Ensayo de exposición a altas temperaturas
  Test involving exposure to high temperatures.....*CORRECT*

DISPOSITIVOS DE DESESCARCHADO Y DESEMPAÑADO / *DE-ICERS AND DE-MISTERS*

Identificación del dispositivo presentado al ensayo / *Identification of the device submitted for test*

Marca de fábrica / *Make*	:	Zeda
Tipo de dispositivo / *Device type*	:	Sistema eléctrico / Electrical system
Descripción / *Description*	:	Por calentador eléctrico / By electrical heater

Requisitos generales / *General requirements*

El vehículo incorpora un dispositivo de desescarchado y desempañado / *The vehicle is equipped with a windscreen de-icer and de-mister*.....*NOT APPLICABLE*

Vehículos con potencia máxima no superior a 15 kW: Cumple con los requisitos del Reglamento UNECE nº 122 para categoría M1 / *Vehicles with a maximum power not exceeding 15 kW: shall meet the requirements of Regulation UNECE No. 122, as prescribed for M1 vehicle category*.....*CORRECT*

Vehículos con potencia máxima superior a 15 kW: Cumple con los requisitos del Reglamento (UE) nº 672/2010 para categoría M1 / *Vehicles with a maximum power exceeding 15 kW: shall meet the requirements of Regulation (EU) No. 672/2010, as prescribed for vehicle category M1* .....*NOT APPLICABLE*

El vehículo incorpora un dispositivo de calefacción en la cabina / *The vehicle is fitted with a suitable passenger compartment heating system* .....*CORRECT*

Lugar del ensayo / *Test place* : CVTRI, Chongqing (China)
Fecha del ensayo / *Test date* : 21.08.2024

Anpeng(apple) Li
INGENIERO DE HOMOLOGACIONES
HOMOLOGATION ENGINEER

APÉNDICE / *APPENDIX* TEV/3/2014/VIII

REQUISITOS APLICABLES A LOS MANDOS ACCIONADOS POR EL CONDUCTOR, CON IDENTIFICACIÓN DE LOS MANDOS, LUCES TESTIGO E INDICADORES /

REQUIREMENTS APPLYING TO DRIVER-OPERATED CONTROLS INCLUDING INDENTIFICATION OF CONTROLS, TELL-TALES AND INDICATORS

Reglamento Delegado (UE) / *Delegated Regulation (EU)* No. 3/2014/VIII*2016/1824

IDENTIFICACIÓN DEL VEHÍCULO PRESENTADO AL ENSAYO /
IDENTIFICATION OF THE VEHICLE SUBMITTED FOR TEST

Marca / *Make* (1)	:	JINMA
Tipo / *Type* (1)	:	TEV
Variantes/Versiones / *Variants/Versions* (1)	:	00/01
Variantes/Versione cubiertas / *Covered variants/Version*	:	00/00, 00/01, 00/02, 01/00, 01/01, 01/02
Categoría, subcategoría y sub-subcategoría / *Category, subcategory and sub-subcategory*	:	L7e-CU
Nº de bastidor / *Frame number*	:	R3W8AZKY3RA000002
Velocidad Máxima / *Maximum Speed*	:	80 km/h - 50 mph
Fecha de recepción de la muestra / *Date sample received*	:	10.08.2024

(1) Información proporcionada por el cliente. El laboratorio no se hace responsable de dicha información / *Information provided by the client. The laboratory is not responsible for such information*

- Datos de los neumáticos / *Tyre data*

	Dimensiones / *Size*	Presión /*Pressure* (kPa)
Delantero / *Front*	175/65R14	320
Trasero / *Rear*	175/65R14	320

- Condiciones de carga del vehículo / *Load conditions of the vehicle*

	P.O.M. / *M.R.O.*(*) (kg)	Masa real / *Actual mass* (kg)
Delantero / *Front*	547	578
Trasero / *Rear*	258	361
TOTAL	805	939

(*) P.O.M. + masa baterías (vehiculo eléctrico) / *M.R.O. + mass of batteries (electric vehicle)*

- Datos del Velocímetro / *Speedometer System Data*

Marca / *Make*	:	Boxin
Tipo / *Type*	:	JM1020-2101000
Clase / *Classe*	:	Digital / *Digital*
Escala / *Dial*	:	Métrica ~~e~~/o imperial / *Metrical ~~and~~/or imperial*

PARTE 1 IDENTIFICACIÓN DE LOS MANDOS, LUCES TESTIGO E INDICADORES /
PART 1 IDENTIFICATION OF CONTROL, TELL-TALES AND INDICATORS

Denominación / Designation	Símbolo / Symbol	Control / *Control*			Testigo/indicador / *Tell-tale/indicator*		
		Presente / *Present* (1)	Símbolo correcto / *Correct symbol* (1)	Situación correcta / *Correct position*	Presente / *Present* (1)	Incorpora símbolo / *Symbol fitted* (1)	Situación correcta / *Correct position*
Parada del motor suplementaria (apagado) / *Supplemental engine stop (OFF)*		N	N.A.	N.A.	N	N.A.	N.A.
Control de parada del motor suplementaria (marcha) / *Supplemental engine stop control (RUN)*		N	N.A.	N.A.	N	N.A.	N.A.
Starter eléctrico / *Electric starter*		N	N.A.	N.A.	N	N.A.	N.A.
Señal acústica / *Audible warning device*		Y	Y	Y	N	N.A.	N.A.
Luz de carretera / *Driving beam*		Y	Y	Y	Y	Y	Y
Luz de cruce / *Passing beam*		Y	Y	Y	N	N.A.	N.A.
Indicadores de dirección / *Direction indicators*		Y	Y	Y	Y(2)	Y(2)	Y(2)
Interruptor general de alumbrado / *Master lamp switch*		Y	Y	Y	N	N.A.	N.A.
Luz de posición / *Position lamp*		N	N	N	Y	Y	Y
Luz de emergencia / *Hazard warning signal*		Y	Y	Y	Y(2)	Y(2)	Y(2)
Control de régimen del motor / *Engine speed control*	N.A.	Y	N.A.	Y	N	N.A.	N.A.
Control del freno delantero / *Front wheel brake control*	N.A.	Y	N.A.	Y	N	N.A.	N.A.

* LOS ENSAYOS HAN SIDO REALIZADOS POR IDIADA AUTOMOTIVE TECHNOLOGY, S.A. LABORATORIO ACREDITADO POR ENAC CON NÚMERO DE ACREDITACIÓN 35/LE2594 / *THE TESTS HAVE BEEN CARRIED OUT BY IDIADA AUTOMOTIVE TECHNOLOGY, S.A. LABORATORY ACCREDITED BY ENAC WITH NUMBER OF ACCREDITATION 35/LE2594*

* LOS RESULTADOS PRESENTADOS SE REFIEREN UNICAMENTE A LA MUESTRA ENSAYADA / *THE PRESENTED RESULTS REFER ONLY TO THE TESTED SAMPLE*

* QUEDA TERMINANTEMENTE PROHIBIDA LA REPRODUCCION PARCIAL DE ESTE INFORME SIN PERMISO EXPRESO DE IDIADA / *THE PARTIAL REPRODUCTION OF THIS REPORT WITHOUT THE PERMISSION OF IDIADA IS COMPLETELY FORBIDDEN*

* EL LABORATORIO HA CALCULADO LA INCERTIDUMBRE DE MEDIDA ASOCIADA A LOS RESULTADOS / *MEASUREMENT UNCERTAINTY OF THE RESULTS HAS BEEN CALCULATED BY THE LABORATORY*

* LA REGLA DE DECISIÓN UTILIZADA, SEGÚN LA NORMA ILAC-G8, HA SIDO LA DECLARACIÓN BINARIA DE ACEPTACIÓN SIMPLE / *THE DECISION RULE USED, ACCORDING TO THE ILAC-G8 STANDARD, WAS THE BINARY STATEMENT FOR SIMPLE ACCEPTANCE*

Denominación / Designation	Símbolo / Symbol	Control / *Control*			Testigo/indicador / *Tell-tale/indicator*		
		Presente / *Present* (1)	Símbolo correcto / *Correct symbol* (1)	Situación correcta / *Correct position*	Presente / *Present* (1)	Incorpora símbolo / *Symbol fitted* (1)	Situación correcta / *Correct position*
Control del freno trasero / *Rear wheel brake control*	N.A.	Y	N.A.	Y	N	N.A.	N.A.
Embrague / *Clutch*	N.A.	N	N.A.	N.A.	N	N.A.	N.A.
Selector manual accionado por el pie del cambio de marchas / *Foot selector manual gear shift control*	N.A.	N	N.A.	N.A.	N	N.A.	N.A.
Punto muerto / *Neutral*		Y	Y	Y	Y	Y	Y
Carga eléctrica / *Electrical charging*		N	N.A.	N.A.	Y	Y	Y
Fallo del sistema antibloqueo de frenos / *Anti-lock brake system malfunction*		N	N.A.	N.A.	Y	Y	Y
Indicador de fallo del motor / *Malfunction indicator engine*		N	N.A.	N.A.	Y	Y	Y
Freno de estacionamiento / *Parking brake*		Y	Y	Y	Y	Y	Y
Puerta abierta / *Open door*		N	N.A.	N.A.	Y	Y	Y
Fallo de frenado / *Brake failure*		N	N.A.	N.A.	Y	Y	Y
Velocímetro / *Speedometer*	N.A.	N	N.A.	N.A.	Y	N.A.	Y
Tacómetro / *Tachometer*	N.A.	N	N.A.	N.A.	Y	N.A.	Y
Cuentakilómetros / *Odometer*	N.A.	N	N.A.	N.A.	Y	N.A.	Y
Pantalla LCD / *LCD display*	N	N	N.A.	N.A.	Y	N.A.	Y
Nivel de carga de las baterías de propulsión / *State of charge of propulsión bateries*	N.A.	N	N.A.	N.A.	Y	Y	Y
Voltaje de la batería / *Battery voltage*	N.A.	N	N.A.	N.A.	Y	Y	Y

Denominación / Designation	Símbolo / Symbol	Control / *Control*			Testigo/indicador / *Tell-tale/indicator*		
		Presente / *Present* (1)	Símbolo correcto / *Correct symbol* (1)	Situación correcta / *Correct position*	Presente / *Present* (1)	Incorpora símbolo / *Symbol fitted* (1)	Situación correcta / *Correct position*
Limpiaparabrisas / *Windscreen wiper*		Y	Y	Y	Y	Y	Y
Lavaparabrisas y limpiaparabrisas / *Windscreen washer and wiper*		Y	Y	Y	Y	Y	Y
Elevador de ventanas / *Window lift*		Y	Y	Y	N	N.A.	N.A.
Aire acondicionado / *Aircondition*	A/C	Y	Y	Y	N	N.A.	N.A.
Calefacción interior / *Interior heating*		Y	Y	Y	N	N.A.	N.A.
Ventilador / *Ventilating fan*		Y	Y	Y	N	N.A.	N.A.
Control de cerradura de puerta / *Door lock control*		Y	Y	Y	N	N.A.	N.A.
Interruptor del espejo retrovisor / *Rear view mirror switch*		Y	Y	Y	N	N.A.	N.A.
Modo / *Mode*	**E/S**	Y	Y	Y	Y	Y	Y
Velocidad / *Gear*	**R/D**	Y	Y	Y	Y	Y	Y
USB / *USB*		Y	Y	Y	N	N.A.	N.A.
Listo / *Ready*	**READY**	N	N.A.	N.A.	Y	Y	Y
Dejar el asiento riminder / *Leave seat riminder*		N	N.A.	N.A.	Y	Y	Y
Temperatura de la batería de alimentación / *Power battery temperature*		N	N.A.	N.A.	Y	Y	Y
Fallo de la batería de propulsión / *Propulsión battery failure*		N	N.A.	N.A.	Y	Y	Y

* LOS ENSAYOS HAN SIDO REALIZADOS POR IDIADA AUTOMOTIVE TECHNOLOGY, S.A. LABORATORIO ACREDITADO POR ENAC CON NÚMERO DE ACREDITACIÓN 35/LE2594 / *THE TESTS HAVE BEEN CARRIED OUT BY IDIADA AUTOMOTIVE TECHNOLOGY, S.A. LABORATORY ACCREDITED BY ENAC WITH NUMBER OF ACCREDITATION 35/LE2594*

* LOS RESULTADOS PRESENTADOS SE REFIEREN UNICAMENTE A LA MUESTRA ENSAYADA / *THE PRESENTED RESULTS REFER ONLY TO THE TESTED SAMPLE*

* QUEDA TERMINANTEMENTE PROHIBIDA LA REPRODUCCION PARCIAL DE ESTE INFORME SIN PERMISO EXPRESO DE IDIADA / *THE PARTIAL REPRODUCTION OF THIS REPORT WITHOUT THE PERMISSION OF IDIADA IS COMPLETELY FORBIDDEN*

* EL LABORATORIO HA CALCULADO LA INCERTIDUMBRE DE MEDIDA ASOCIADA A LOS RESULTADOS / *MEASUREMENT UNCERTAINTY OF THE RESULTS HAS BEEN CALCULATED BY THE LABORATORY*

* LA REGLA DE DECISIÓN UTILIZADA, SEGÚN LA NORMA ILAC-G8, HA SIDO LA DECLARACIÓN BINARIA DE ACEPTACIÓN SIMPLE / *THE DECISION RULE USED, ACCORDING TO THE ILAC-G8 STANDARD, WAS THE BINARY STATEMENT FOR SIMPLE ACCEPTANCE*

Denominación / Designation	Símbolo / Symbol	Control / *Control*			Testigo/indicador / *Tell-tale/indicator*		
		Presente / *Present* (1)	Símbolo correcto / *Correct symbol* (1)	Situación correcta / *Correct position*	Presente / *Present* (1)	Incorpora símbolo / *Symbol fitted* (1)	Situación correcta / *Correct position*
Fallo de dirección / *Steering failure*		N	N.A.	N.A.	Y	Y	Y
Modo de rendimiento limitado / *Limited performance mode*		N	N.A.	N.A.	Y	Y	Y
Cinturón de seguridad / *Safety belt*		N	N.A.	N.A.	Y	Y	Y
Fallo del sistema / *System failure*		N	N.A.	N.A.	Y	Y	Y
Estado de carga de la batería de propulsión / *State of charge propulsión battery*		N	N.A.	N.A.	Y	Y	Y
Sobrecalentamiento del motor o del controlador / *Motor or controller overheat*		N	N.A.	N.A.	Y	Y	Y
Ubicación de la toma de carga / *Charging socket location*		N	N.A.	N.A.	Y	Y	Y
Amperímetro / *Ammeter*		N	N.A.	N.A.	Y	Y	Y
Bluetooth / *Bluetooth*		N	N.A.	N.A.	Y	Y	Y

(1) Y = Sí / *Yes*
N = No / *No*
* = Simbolo específico en relación al Anexo VIII / *Specific symbol regarding to Annex VIII*

(2) Testigos separados / *Split in two*

(3) Actuación simultánea de los indicadores de dirección / *Simultaneous actuation of indicator direction*

(4) El cuadro de mandos se ilumina al activarse la luz de posición o de cruce / *The display is illuminated whenever the position lamp or headlamp is activated.*

(5) Testigo desactivado / *Tell-tale deactivated*

- Requisitos de espacio común / *Common space requirements*

  Los testigos de fallo de frenado, luces de carretera e indicadores de dirección no están situados en el mismo espacio común / *The braking system malfunction, headlamp driving beam and direction indicator tell-tales aren't shown in the same common space*.....*NOT APPLICABLE*

  Los testigos de fallo de frenado, luces de carretera o indicadores de dirección, que comparten espacio común con otros testigos tienen prioridad de activación / *The braking system malfunction, headlamp driving beam and direction indicator tell-tales displayed in a common space have priority to activation*.....*NOT APPLICABLE*

  No es posible desactivar ningún testigo rojo / *It is not possible to deactivate any red tell-tale*.....*NOT APPLICABLE*

  Es posible eliminar automáticamente o por el conductor información que aparezca en un espacio común / *It may be possible for information displayed in a common space to be cancelled automatically or by the driver* .....*NOT APPLICABLE*

PARTE 2 VELOCÍMETRO Y ODÓMETRO / *PART 2 SPEEDOMETER AND ODOMETER*

Especificaciones generales del velocímetro y odómetro / *General requirements of the speedometer and odometer*

ODÓMETRO / *ODOMETER*

Instalación del odómetro / *Odometer installation* .....*CORRECT*
Digital en km y/o millas / *Digital in km and/or miles*
(reminder, for countries with imperial units, the odometer must be in miles)

Odómetro con al menos 5 numerales / *Odometer with at least 5 numerals* .....*CORRECT*

VELOCÍMETRO / *SPEEDOMETER*

Escala dentro del campo de visión y visible de día y de noche / *Dial within the direct field of view and clearly legible both day and night*.....*CORRECT*

Incluye la velocidad máxima del vehículo / *Includes the maximum speed of the vehicle*.....*CORRECT*

Graduación no digital claramente legible / *Not digital dial clearly graduated*.....*CORRECT*

- Graduaciones y valores numéricos en km/h / *Graduation and numerical values in km/h*

  Valor de graduación de la escala / *Graduation value*: 1 km/h.....*CORRECT*

  Valor de los intervalos numéricos / *Numerical intervals values*: 1 km/h .....*CORRECT*

- Graduaciones y valores numéricos en mph / *Graduation and numerical values in mph*

  Valor de graduación de la escala / *Graduation value*: mph .....*CORRECT*

  Valor de los intervalos numéricos / *Numerical interval values: 1 mph* .....*CORRECT*

- Velocímetros para ciclomotores / *Speedometers for mopeds* :

  Valor de velocidad máxima no superior a 80 km/h /
  Value of maximum speed not exceeding 80 km/h.....*NOT APPLICABLE*

ENSAYO / *TEST*

- Condiciones de ensayo / *Test conditions*:

  El ensayo se efectúa en pista con un revestimiento plano, seco y de adherencia suficiente / *The test is carried out on a track, the surface of which is flat, dry and provides sufficient grip* .....*NOT APPLICABLE*

  El ensayo se efectúa en banco dinamométrico de rodillos con diámetro superior a 0,4m / *The test is carried out on a roller dynamometer bench with a diameter more than 0,4m* .....*CORRECT*

  Temperatura de referencia en el velocímetro igual a 23 ºC ± 15 ºC /
  Reference temperature at the speedometer equal to 23 ºC ± 15 ºC.....*CORRECT*

  Temperatura ambiente / *Ambient temperature*: 25,7 ºC

- Resultados del ensayo (en km/h) / *Test results (in km/h)*

Velocidad indicada / *Read speed*	40	40	40	64	64	64
Velocidad real / *Actual speed*	38,2	38,1	38,1	60,2	60,4	60,3
Diferencia (indicada-real) / *Difference (read-actual)*	1,8	1,9	1,9	3,8	3,6	3,7
Valor límite / *Limit value*	7,82	7,81	7,81	10,02	10,04	10,03

Resultado del ensayo / *Test result* (km/h) .....*CORRECT*

- Resultados del ensayo (en mph) / *Test results (in mph)*

Velocidad indicada / *Read speed*	25	25	25	40	40	40
Velocidad real / *Actual speed*	23,9	23,9	23,9	37,7	37,7	37,6
Diferencia (indicada-real) / *Difference (read-actual)*	1,1	1,1	1,1	2,3	2,3	2,4
Valor límite / *Limit value*	4,87	4,87	4,87	6,25	6,25	6,24

Resultado del ensayo / *Test result* (mph) .....*CORRECT*

Lugar del ensayo / *Test place* : CVTRI, Chongqing (China)
Fecha del ensayo / *Test date* : 25.08.2024

Anpeng(apple) Li
INGENIERO DE HOMOLOGACIONES
HOMOLOGATION ENGINEER

APÉNDICE / *APPENDIX* TEV/3/2014/IX

REQUISITOS APLICABLES A LA INSTALACIÓN DE DISPOSITIVOS DE ALUMBRADO Y SEÑALIZACIÓN LUMINOSA, INCLUIDO EL ENCENDIDO Y APAGADO AUTOMÁTICO DEL ALUMBRADO / *REQUIREMENTS APPLYING TO INSTALLATION OF LIGHTING AND LIGHT SIGNALLING DEVICES, INCLUDING AUTOMATIC SWITCHING OF LIGHTING*

Reglamento Delegado (UE) / *Delegated Regulation (EU)* No. 3/2014/IX*2016/1824

IDENTIFICACIÓN DEL VEHÍCULO PRESENTADO AL ENSAYO / *IDENTIFICATION OF THE VEHICLE SUBMITTED FOR TEST*

Marca / *Make* (1)	:	JINMA
Tipo / *Type* (1)	:	TEV
Variantes/versiones ensayadas / *Tested variants/versions* (1)	:	00/01
Variantes/versiones cubiertas / *Covered variants/versions*	:	00/00, 00/01, 00/02, 01/00, 01/01, 01/02
Categoría, subcategoría y sub-subcategoría / *Category, subcategory and sub-subcategory*	:	L7e-CU
Nº de bastidor / *Frame number*	:	R3W8AZKY3RA000002
Fecha de recepción de la muestra / *Date sample received*	:	10.08.2024

(1) Información proporcionada por el cliente. El laboratorio no se hace responsable de dicha información / *Information provided by the client. The laboratory is not responsible for such information*

LISTADO DE LOS DISPOSITIVOS DE ALUMBRADO Y SEÑALIZACIÓN LUMINOSA (L5e y L7e)/ *LIST OF LIGHTING AND LIGHT-SIGNALLING DEVICES (L5e and L7e)*

Dispositivos de instalación obligatoria / *Devices of mandatory installation*

Luz de carretera / *Main-beam headlamp*.....WCR-CS PL E57 149R00 1161

Luz de cruce / *Dipped-beam headlamp*.....WCR-CS PL E57 149R00 1161

Luz de posición delantera / *Front position lamp* .....MA 148R00 1161

Luz de posición trasera / *Rear position lamp* E32 50R-000115

Luces indicadoras de dirección / *Direction indicator lamps*.....Del. / *Front*: 11b 148R00 1161
.....Tras. / *Rear*: 12 E32 50R-000115

Catadióptrico trasero no triangular / *Non-triangular rear retro-reflector*.....IA E4 02.3327

Dispositivo de alumbrado de la placa posterior de matrícula / *Rear registration plate lamp* .....L 01 E57 0005

Luz de freno / *Stop-lamp* E32 50R-000115

Catadióptricos laterales no triangulares / *Non-triangular side retro-reflectors* .....IA E4 023298

Dispositivos de instalación optativa / *Devices of optional installation*

Luz antiniebla delantera / *Front fog lamps* .....*NOT FITTED*

Luz antiniebla trasera / *Rear fog lamp* .....*NOT FITTED*

Luces de emergencia / *Hazard warning signal* .....Del. / *Front*: 11b 148R00 1161
Tras. / *Rear*: 12 E32 50R-000115

Luz de circulación diurna / *Daytime running lamp*.....RL E57 148R00 1780

Luz de marcha atrás / *Reversing lamp* .....AR 00 E32 0115

DISPOSICIONES GENERALES / *GENERAL SPECIFICATIONS*

Los dispositivos de alumbrado y señalización funcionan correctamente a pesar de las vibraciones / *The lighting and light-signalling devices perform correctly under normal conditions of use and vibrations*.....*CORRECT*

Luces de alumbrado de regulación fácil /
Alignment of illuminating lamps can easily be set correctly.....*CORRECT*

Eje de referencia de las luces perpendiculares al plano longitudinal /
Reference axis of the lamp perpendicular to the median longitudinal plane of the vehicle.....*CORRECT*

Condiciones de ensayo / *Test conditions*.....*CORRECT*

Igualdad de funciones de luces del mismo par /
Equality of functions of the same pair of lamps .....*CORRECT*

Agrupación, combinación o incorporación de luces /
Grouping, combination or incorporation of lamps .....*CORRECT*

Luces intermitentes únicamente indicadoras de dirección o de emergencia /
No lamps other than direction indicator lamps and hazard warning signal may emit flashing light .....*CORRECT*

No visibilidad de luz roja y luz blanca delante o detrás respectivamente /
No red lamp and white lamp must be visible towards the front or the rear respectively.....*CORRECT*

Conexionado simultáneo de las luces de posición (si procede) y cruce delanteras con posición y matrícula traseras / *Simultaneous switch on of the front position lamp and the dipped-beam headlamp with the rear position lamp and the rear registration plate lamp* .....*CORRECT*

Conexionado eléctrico de las luces de carretera, cruce y antiniebla con las de posición y matrícula / *The electrical connection of the main-beam lamp, the dipped-beam lamp and the fog lamp cannot be switched on until the front position lamp, the rear position lamp and the rear registration plate lamp have also been switched on* .....*CORRECT*

Vehículo equipado con faro delantero que se enciende automáticamente cuando el motor está en funcionamiento / *Vehicle fitted with headlamp which are automatically switched on when the engine is running* .....*CORRECT*

Visibilidad de los testigos luminosos / *All telltales must be clearly visible* .....*CORRECT*

El color de las luces es correcto /
T*he coulour emitted by the lamps is adequate* .....*CORRECT*

Los dispositivos de alumbrado y de señalización luminosa están homologados / *The lighting and light-signalling devices incorporating the vehicle are approved* .....*CORRECT*

DISPOSICIONES PARTICULARES DE INSTALACIÓN / *SPECIFIC FITTING REQUIREMENTS*

Nº / *No*	Denominación / *Designation*	Dispone / *Presence*	Contraseña de homologacioón / *Approval mark*	Número / *Number*	Color / *Colour*	Emplazamiento en anchura / *Location in width*	Emplazamiento en altura / *Location in height*	Emplazamiento en longitud / *Length location*	Visibilidad Geométrica / *Geometrical Visibility*	Orientación / *Orientation*	Relación con otros dispositivos / *Relation with other devices*	Conexión eléctrica / *Electrical connections*	Requisitos de instalación para SAIH / *HIAS fitting requirements*	Testigo de conexión / *Circuit-closed tell-tale*	Otros requisitos / *Other requirements*
8.01	Luces de carretera / *Driving-beam headlamps*	Y	C	2	Blanco / *White*	C	C	FW	C	C	Y	C	N	Y	---
8.02	Luces de cruce / *Passing-beam headlamps*	Y	C	2	Blanco / *White*	C	C	FW	C	C	Y	C	N	N	---
8.03	Luces indicadoras de dirección / *Direction indicator lamps*	Y	C	4	Amarillo / *Amber*	C	C	FW / RW	C	C	N	C	N	Y	---
8.04	Luces de frenado / *Stop lamps*	Y	C	2	Rojo / *Red*	C	C	RW	C	C	Y	C	N	N	---
8.05	Luz de posición delantera / *Front position lamp*	Y	C	2	Blanco / *White*	C	C	FW	C	C	Y	C	N	Y	---
8.06	Luces de posición traseras / *Rear position lamps*	Y	C	2	Rojo / *Red*	C	C	RW	C	C	Y	C	N	Y	---
8.07	Dispositivos de alumbrado de la placa posterior de matrícula / *Rear registration plate lamp*	Y	C	1	Blanco / *White*	C	C	C	C	C	N	C	N	Y	---
8.08	Catadióptricos traseros no triangulares / *Non-triangular rear retro-reflectors*	Y	C	2	Rojo / *Red*	C	C	RW	C	C	N	N	N	N	---

Nº / *No*	Denominación / *Designation*	Dispone / *Presence*	Contraseña de homologacioón / *Approval mark*	Número / *Number*	Color / *Colour*	Emplazamiento en profundidad / *Width location*	Emplazamiento en altura / *Height location*	Emplazamiento en longitud / *Length location*	Visibilidad Geométrica / *Geometrical Visibility*	Orientación / *Orientation*	Relación con otros dispositivos / *Relation with other devices*	Conexión eléctrica / *Electrical connections*	Requisitos de instalación para SAIH / *HIAS fitting requirements*	Testigo de conexión / *Circuit-closed tell-tale*	Otros requisitos / *Other requirements*
8.09	Catadióptricos laterales no triangulares / *Non-triangular side retro-reflectors*	Y	C	2	Amarillo / *Amber*	C	C	C	C	C	N	N	N	N	---
8.10	Luces de emergencia / *Hazard warning signal*	Y	C	4	Amarillo / *Amber*	C	C	C	C	C	N	C	N	Y	---
8.11	Luz antiniebla delantera / *Front fog lamps*	N	N	N	N	N	N	N	N	N	N	N	N	N	---
8.12	Luz antiniebla trasera / *Rear fog lamp*	N	N	N	N	N	N	N	N	N	N	N	N	N	---
8.13	Luz de circulación diurna / *Daytime running lamp*	Y	C	2	Blanco / *White*	C	C	FW	C	C	Y	C	N	Y	---
8.14	Luz de marcha atrás / *Reversing lamp*	Y	C	2	Blanco / *White*	C	C	RW	C	C	N	C	N	N	---

Y : *Yes*; N : No; C : Conforms
L : *Left*
R : *Right*
FW : *Frontwards*
RW : *Rearwards*

Lugar del ensayo / *Test place* : CVTRI, Chongqing (China)
Fecha del ensayo / *Test date* : 20.08.2024

Anpeng(apple) Li
INGENIERO DE HOMOLOGACIONES
HOMOLOGATION ENGINEER

APÉNDICE / *APPENDIX* TEV/3/2014/X

REQUISITOS RELATIVOS A LA VISIBILIDAD TRASERA /
REQUIREMENTS REGARDING REAWARD VISIBILITY

Reglamento Delegado (UE) / *Delegated Regulation (EU)* No 3/2014/X*2016/1824

IDENTIFICACIÓN DEL VEHÍCULO PRESENTADO AL ENSAYO /
IDENTIFICATION OF THE VEHICLE SUBMITTED FOR TEST

Marca / *Make* (1)	:	JINMA
Tipo / *Type* (1)	:	TEV
Variantes/versiones ensayadas / *Tested variants/versions* (1)	:	00/01
Variantes/versiones cubiertas / *Covered variants/versions* (1)	:	00/00, 00/01, 00/02, 01/00, 01/01, 01/02
Categoría, subcategoría y sub-subcategoría / *Category, subcategory and sub-subcategory*	:	L7e-CU
Nº de bastidor / *Frame number*	:	R3W8AZKY3RA000002
Fecha de recepción de la muestra / *Date sample received*	:	10.08.2024

Observación / *Remark*: Instalación de retrovisores de acuerdo con los requisitos del Reglamento CEPE Nº 46 / *Rear view mirrors fitted according to the requirements of UNECE Regulation No. 46*

(1) Información proporcionada por el cliente. El laboratorio no se hace responsable de dicha información / *Information provided by the client. The laboratory is not responsible for such information*

DATOS DE LOS RETROVISORES / *REAR-VIEW MIRRORS DATA*

	INTERIOR / *INSIDE*	**EXT. IZQUIERDO / *LEFT-HAND EXT.***	**EXT. DERECHO / *RIGHT-HAND EXT.***
Marca de fábrica o comercial / *Make name*	---	Weiteli	Weiteli
Tipo / Modelo / *Type / Model*	---	DZ-1082-L	DZ-1082-R
Contraseña de homologación / *Component type-approval*	---	E57*46R05/00*0364	E57*46R05/00*0364
Clase / *Class*	---	III	III
Número / *Number*	---	1	1

EMPLAZAMIENTO / *POSITION*

Los retrovisores se mantienen en posición estable / *All rear-view mirrors remain in a stable position under normal vehicle driving conditions* .....*CORRECT*

NÚMERO DE RETROVISORES / *NUMBER OR REAR-VIEW MIRRORS*

Nº de retrovisores que incorpora el vehiculo / *Number of rear-view mirrors of the vehicle* : 2 .....*CORRECT*

Vehículos NO carrozados / *UNBODIED vehicles*

Distancia del plano longitudinal medio del vehículo hasta el centro del retrovisor / *Distance between the median longitudinal plane of the vehicle and the centre of the reflecting surface*: --- mm > 280 mm.....*NOT APPLICABLE*

Visión lateral y posterior clara / *Clear view of the road to the rear and side(s) of the vehicle*.....*NOT APPLICABLE*

Vehículos carrozados / *Bodied vehicles*

Visibilidad retrovisor a través de cristales laterales o superficie barrida por el parabrisas / *Exterior rear-view mirrors are visible through the side window or through the portion of the windscreen which is swept by the windscreen wiper*.....*CORRECT*

Ángulo definido por el plano long. medio vehículo y el plano centro retrovisor del conductor y puntos oculares / *Angle formed between the vertical longitudinal median plane of the vehicle and the vertical plane passing through the centre of the rear view and through the centre of the straight line which joins the driver's two ocular points*: 45º < 55º.....*CORRECT*

El retrovisor no sobresale más de 0.20 m del punto más exterior del vehículo / *The rear-view mirror not project more than 0.20 m beyond the overall width of the vehicle*.....*CORRECT*

Aplicable si el borde inferior del retrovisor está situado a menos de 2 m del suelo
Where the lower edge of an exterior rear-view mirror is less than 2 m above the ground

CAMPO DE VISIÓN DE LA CARROCERÍA / *FIELD OF VISION IN THE CASE OF BODYWORK*

Retrovisor interior (clase I) / *Interior mirror (class I)*:

Anchura ≥ 20 m en el suelo a 60 m detrás de los ojos del conductor /
Width ≥ 20 m at ground level at 60 m behind from driver's eyes .....*NOT APPLICABLE*

Retrovisor exterior lado conductor (clase III) / *Exterior mirror driver's side (class III)*:

Anchura ≥ 4.0 m en el suelo a 20 m detrás de los ojos del conductor y
Anchura ≥ 1.0 m en el suelo a 4 m detrás de los ojos del conductor /
Width ≥ 4.0 m ground at 20 m behind from driver's eyes and
Width ≥ 1.0 m ground at 4 m behind from driver's eyes .....*CORRECT*

Retrovisor exterior lado acompañante (clase III) / *Exterior mirror passenger's side (class III)*:

Anchura ≥ 4.0 m en el suelo a 20 m detrás de los ojos del conductor y
Anchura ≥ 1.0 m en el suelo a 4 m detrás de los ojos del conductor /
Width ≥ 4.0 m ground at 20 m behind from driver's eyes
Width ≥ 1.0 m ground at 4 m behind from driver's eyes .....*CORRECT*

Obstrucciones / *Obstructions*:

Retrovisor interior / *Interior mirror* : ≤ 15 % .....*NOT APPLICABLE*

Retrovisor exterior lado conductor /
Exterior mirror driver's side : ≤ 10 % .....*CORRECT*

Retrovisor exterior lado acompañante /
Exterior mirror passanger's side : ≤ 10 % .....*CORRECT*

Observación / *Remark*: Los ensayos han sido realizados en configuraciones de vehículo con y sin puertas / *Tests have been performed in vehicle's configurations with and without doors*

AJUSTE DEL RETROVISOR / *ADJUSTMENT*

Ajuste por el conductor desde el puesto de conducción /
Adjustment by drivers from their driving position .....*CORRECT*

Lugar del ensayo / *Test place* : CVTRI, Chongqing (China)
Fecha del ensayo / *Test date* : 16.10.2024

Anpeng(apple) Li
INGENIERO DE HOMOLOGACIONES
HOMOLOGATION ENGINEER

APÉNDICE / *APPENDIX* TEV/3/2014/XII

REQUISITOS APLICABLES A LOS CINTURONES DE SEGURIDAD Y SUS ANCLAJES / *REQUIREMENTS APPLYING TO SAFETY BELTS ANCHORAGES AND SAFET BELTS*

Reglamento Delegado (UE) / *Delegated Regulation (EU)* No. 3/2014/XII*2016/1824

IDENTIFICACIÓN DEL VEHÍCULO PRESENTADO AL ENSAYO / *IDENTIFICATION OF THE VEHICLE SUBMITTED FOR TEST*

Marca / *Make* (1)	:	JINMA
Tipo / *Type* (1)	:	TEV
Variantes/Versiones / *Variants/Versions* (1)	:	00/00, 00/01, 00/02, 01/00, 01/01, 01/02
Categoría, subcategoría y sub-subcategoría / *Category, subcategory and sub-subcategory*	:	L7e-CU
Nº de bastidor / *Frame number*	:	Prototipo / *Prototype*
Fecha de recepción de la muestra / *Date sample received*	:	10.08.2024

(1) Información proporcionada por el cliente. El laboratorio no se hace responsable de dicha información / *Information provided by the client. The laboratory is not responsible for such information*

PARTE 1 / *PART 1*

Los vehículos de categorías L5e, L6e y L7e con una masa en orden de marcha > 270 kg irán provistos de cinturones de seguridad y anclajes en los asientos / *Vehicles of categories L5e, L6e and L7e with a mass in running order > 270 kg shall be fitted with safety belt anchorages and safety belts on seats* ..... *CORRECT*

Número de anclajes de los cinturones de seguridad suficiente para facilitar la correcta instalación del cinturón de seguridad / *The number of safety belt anchorages provided is sufficient to facilitate the correct installation of the safety belt*..... *CORRECT*

Anclajes de los cinturones de seguridad se ajustan a las especificaciones 7/16-20 UNF 2B, con características diferentes o para cinturones de tipo especial / *Safety belt anchorages conform to the 7/16-20 UNF 2B, have diferent characteristics or for the installation of special type seat belts* ..... *CORRECT*

Es posible desmontar un cinturón de seguridad sin causar daño alguno al punto de anclaje del mismo / *It is possible to remove a safety belt without any remaining damage to the safety belt anchorage point*..... *CORRECT*

Determinación del punto R / *R point determination*..... *CORRECT*

PARTE 2 / *PART 2*

El posicionamento de los anclajes efectivos cumple con las prescripciones de esta parte / *Effective anchorage points positioned according to requirements of this part* .....*CORRECT*

Sistema de anclaje ISOFIX o sistema parecido cumple con los requisitos relativos a su emplazamiento, marcado y resistencia según el Reglamento CEPE nº 14 / *ISOFIX anchorage system or a system which resembles ISOFIX meets all relevant location, marking and strength requirements according to UNECE Regulation No. 14* .....*NOT APPLICABLE*

Ensayo de resistencia de los anclajes de los cinturones / *Strenght test of safety belt anchorages*

- **Condiciones del ensayo / *Test conditions***

Ensayo sobre / *Test on*	:	Bancada rígida / *Rigid bench*
Situación puertas / *Doors positioning*	:	No aplicable / *Not applicable*
Situación ventanas / *Windows positioning*	:	No aplicable / *Not applicable*
Colocación asiento del conductor / *Driver's seat placing*	:	Posición más adelantada / *Foremost position*
Colocación de otros asientos / *Others seats placing*	:	Posición más retrasada / *Rearmost position*
Ángulo de respaldo / *Backrest angle*	:	30º
Descripción de los cinturones / *Seat belt description*	:	De tres puntos con retractor con carrete de inercia / *Three-point seatbelt with inertia reel retractor*
Peso del asiento completo / *Weight of the complete seat*	:	Asientos delanteros / *Front seats* : 10 kg (Conductor / *Driver*) 10 kg (Pasajero / *Passenger*)
Ángulo de las fuerzas de tracción (anclajes) / *Angle of traction forces (anchorages)*	:	10º ± 5º respecto a la horizontal / *from the horizontal plane*
Tiempo de accionamiento de las cargas límite sobre anclajes / *Time of action of limit forces on anchorages*	:	t > 0.2 s

- **Ensayo de anclajes de cinturones de tres puntos / *Test of three-point seat belts anchorages*:**

- Asiento izquierdo primera fila (Conductor) / *First row, left side seat (Driver)*

	Carga mínima / *Minimum load* (daN)	Carga alcanzada / *Attained load* (daN)
Entre anclajes superiores / *Between upper anchorages*	675 ± 20	681
Entre anclajes inferiores / *Between lower anchorages*	675 ± 20	680
En el centro de gravedad de la estructura del asiento / *At the centre of gravity of the seat structure*	10 veces diez veces el peso del asiento completo / *10 times the weight of the complete seat*	100

- Asiento derecho primera fila (Pasajero) / *First row, right side seat (Passenger)*

	Carga mínima / *Minimum load* (daN)	Carga alcanzada / *Attained load* (daN)
Entre anclajes superiores / *Between upper anchorages*	675 ± 20	676
Entre anclajes inferiores / *Between lower anchorages*	675 ± 20	676
En el centro de gravedad de la estructura del asiento / *At the centre of gravity of the seat structure*	10 veces diez veces el peso del asiento completo / *10 times the weight of the complete seat*	99

- **Comprobaciones después de los ensayos / *Checkings after the tests***

Cada punto de anclaje soporta la fuerza requerida durante el tiempo estipulado / *Each safety belt anchorage point widthstands the required force sustained for the specified time*.....*CORRECT*

Los sistemas de desplazamiento incorporados en los asientos se pueden activar manualmente una vez deja de aplicarse la fuerza de tracción / *Displacement systems fitted to seats are capable of being manually activated after the tractive force is no longer applied*.. .....*CORRECT*

PARTE 3 / *PART 3*

Se instalan cinturones de seguridad en todas las plazas de asiento que consistan en asientos, la plaza de asiento del conductor lleva cinturón de tres puntos o de arnés / *Safety belts fitted to all seating positions consisting of seats, driver's seating position fitted with three-point or harness-type safety belt* .....*CORRECT*

Vehículos de las categorías L7e-A2, L7e-B2 y L7e-C incorporan cinturones de seguridad de tres puntos o de arnés en todas las plazas de asiento, sea cual sea la masa en orden de marcha / *Vehicle of categories L7e-A2, L7e-B2 and L7e-C fitted with three-point or harness-type safety belts on all seating positions, regardless of its mass in running order*.....*CORRECT*

FILA ASIENTO / *SEAT ROW*	ASIENTO / *SEAT*	CONTRASEÑA / *TYPE-APPROVAL MARK*	SÍMBOLO ADICIONAL / *ADDITIONAL SYMBOL*
Delantera / *Front*	Lateral izquiedo (conductor) / *Outboard left (driver)*	E13 08 10153	Ar4m
	Lateral derecho (pasajero) / *Outboard right (passenger)*	E13 08 10153	Ar4m
	Central / *Central*	---	---
Trasera / *Rear*	Todos / *All*	---	---

Todos los cinturones de seguridad están homologados e instalados de acuerdo con las especificaciones del fabricante del cinturón / *All safety belts are type-approved and fitted in accordance with the safety belt manufacturer's specifications* ..... *CORRECT*

Marcaje de los cinturones / *Component type-approval marks* ..... *CORRECT*

En los cinturones provistos con retractores, al menos un retractor actúa sobre la correa diagonal / *On three points belts fitted with retractors, one retractor operates at least on the diagonal strap* ..... *CORRECT*

Configuración no peligrosa del cinturón / *The straps are not likely to assume a dangerous configuration* ..... *CORRECT*

Mínimo riesgo de deslizamiento del cinturón en condiciones normales / *Minimum risk of the strap slipping from the shoulder* ..... *CORRECT*

Deterioro por contacto de la correa / *Strap deteriorating through any contact* ..... *CORRECT*

- **Prescripciones especiales / *Special prescriptions***

Las partes rígidas no pueden provocar heridas en caso de accidente / *Rigid parts not increase the risk of bodily injury in the event of an accident* ..... *CORRECT*

Dispositivo de desbloqueo visible, manejable y no se abre involuntaria o accidentalmente / *The device for releasing the buckle is clearly visible and cannot be opened inadvertently or accidentally* ..... *CORRECT*

La hebilla se desabrocha con un único movimento, en una dirección y con una sola mano / *The buckle can be released with a single moviment of either hand in one direction* ..... *CORRECT*

Ajuste automático del dispositivo o ajuste manual fácil / *The belt adjust automatically or is readily accessible to the wearer* ..... *CORRECT*

Los retractores funcionan correctamente y la correa se enrolla automáticamente / *Retractors operate correctly and stow the strap efficiently* ..... *CORRECT*

Lugar del ensayo / *Test place* : CVTRI, Chongqing (China)
Fecha del ensayo / *Test date* : 14.08.2024

Anpeng(apple) Li
INGENIERO DE HOMOLOGACIONES
HOMOLOGATION ENGINEER

APÉNDICE / *APPENDIX* TEV/3/2014/XIII

REQUISITOS APLICABLES A LAS PLAZAS DE ASIENTO (sillines y asientos) /
REQUIREMENTS APPLYING TO SEATING POSITIONS (saddles and seats)

Reglamento Delegado (UE) / *Delegated Regulation (EU)* No. 3/2014/XIII*2016/1824

IDENTIFICACIÓN DEL VEHÍCULO PRESENTADO AL ENSAYO /
IDENTIFICATION OF THE VEHICLE SUBMITTED FOR TEST

Marca / *Make* (1)	:	JINMA
Tipo / *Type* (1)	:	TEV
Variantes/Versiones / *Variants/Versions* (1)	:	00/01
Variantes/Versiones cubiertas / *Covered Variants/Versions* (1)	:	00/00, 00/01, 00/02, 01/00, 01/01, 01/02
Categoría, subcategoría y sub-subcategoría / *Category, subcategory and sub-subcategory*	:	L7e-CU
Nº de bastidor / *Frame number*	:	R3W8AZKY3RA000002
Fecha de recepción de la muestra / *Date sample received*	:	10.08.2024

(1) Información proporcionada por el cliente. El laboratorio no se hace responsable de dicha información /
Information provided by the client. The laboratory is not responsible for such information

REQUISITOS PARA LAS PLAZAS DE ASIENTO / *SEATING POSITIONS REQUIREMENTS*

Vehiculo provisto como mínimo de un asiento o sillín /
Vehicle fitted with at least one seat or saddle.....*CORRECT*

Tipo de plazas de asiento: ~~sillines o~~ asientos /
Type of seating positions: ~~*saddle or*~~ *seats*.....*CORRECT*

Todos los asientos tienen respaldos / *All seats have seat backrests* .....*CORRECT*

Las plazas de asiento están orientadas hacia adelante /
Seating positions are forward-facing.....*CORRECT*

Altura del punto H del conductor /
Height of driver's H-point: 995 mm ≥ 400 mm.....*CORRECT*
L2e, L5e, L6e & L7e ≥ 400 mm)

Resistencia de los sillines o asientos equipados con anclajes de cinturones de seguridad y/o cinturones de seguridad verificada según uno de los métodos descritos en el punto 1.8.1. de este Anexo / *Resistance of the seats or saddles fitted with safety belt anchorage points and/or safety belts verified according one of the methods described in point 1.8.1. of this Annex*.....*CORRECT*

Observación / *Remark* : Ver resultados de ensayo en Apéndice xxx/3/2014/XII /
See test results in Appendix xx/3/2014/XII

REQUISITOS DE SISTEMAS DE RETENCIÓN INFANTIL / *CHILD RESTRAINT SYSTEMS REQUIREMENTS*

El fabricante recomienda sistemas de retención que cumplan con el Reglamento UNECE nº 44 para su uso en el vehiculo / *Child restraint systems complying with UNECE regulation No. 44 recommended by the manufacturer for use in its vehicle*.....*NOT APPLICABLE*

Lugar del ensayo / *Test place* : CVTRI, Chongqing (China)
Fecha del ensayo / *Test date* : 13.08.2024

Anpeng(apple) Li
INGENIERO DE HOMOLOGACIONES
HOMOLOGATION ENGINEER

APÉNDICE / *APPENDIX* TEV/3/2014/XIV

REQUISITOS APLICABLES A LA MANIOBRABILIDAD, LAS PROPIEDADES DE GIRO EN CURVA Y LA CAPACIDAD DE GIRO / *REQUIREMENTS REGARDING STEER-ABILITY, CORNERING PROPERTIES AND TURN-ABILITY*

Reglamento Delegado (UE) / *Delegated Regulation (EU)* No. 3/2014/XIV*2016/1824

IDENTIFICACIÓN DEL VEHÍCULO PRESENTADO AL ENSAYO / *IDENTIFICATION OF THE VEHICLE SUBMITTED FOR TEST*

Marca / *Make* (1)	:	JINMA
Tipo / *Type* (1)	:	TEV
Variante/versión ensayada/ *Tested variant/version* (1)	:	00/01
Variantes/versiones cubiertas / *Covered variants/versions* (1)	:	00/00, 00/01, 00/02, 01/00, 01/01, 01/02
Categoría, subcategoría y sub-subcategoría / *Category, subcategory and sub-subcategory*	:	L7e-CU
Nº de bastidor / *Frame number*	:	R3W8AZKY3RA000002
Fecha de recepción de la muestra / *Date sample received*	:	10.08.2024

(1) Información proporcionada por el cliente. El laboratorio no se hace responsable de dicha información / *Information provided by the client. The laboratory is not responsible for such information*

- Velocidad máxima declarada / *Maximum declared speed* : 80 km/h

- Neumáticos / *Tyres*

	Dimensiones / *Size*	Presión / *Pressure* (kPa)
Delantero / *Front*	175/65R14	300
Trasero / *Rear*	175/65R14	300

- Condiciones de carga del vehículo / *Load conditions of the vehicle*:

	P.O.M.(2) + Baterías / *M.R.O.*(2) + *Batteries* (kg)	Carga / *Laden* (kg)
Delantero / *Front*	547	743
Posterior / *Rear*	258	861
TOTAL	805	1604

(2) Peso en orden de marcha / *Mass in running order*

REQUISITOS ESPECÍFICOS / *SPECIFIC REQUIREMENTS* (L2e, L4e, L5e, L6e, L7e)

Todas las ruedas son capaces de rodar a diferentes velocidades / *All wheels are capable to rotating different speeds* .....*CORRECT*

El vehículo tiene marcha atrás / *Vehicle has reversing gear*.....*CORRECT*

El círculo de viraje sigue igual o aumenta cuando se suelta el mando de dirección de las ruedas directrices semigiradas a una velocidad de como mínimo 6 km/h / *The turning circle remains the same or becomes larger when the steering control is released from half lock position at speed of at least 6 km/h*.....*CORRECT*

REQUISITOS PERTINENTES / *RELEVANT REQUIREMENTS*

Maniobra de giro para ambos lados en un circulo final de 12 m de radio a como mínimo 6 km/h / *Circular turn manoeuvre to both sides in a radius of 12 m at speed of at least 6 km/h* .....*CORRECT*

Salida de una curva de Rc ≤ 40 m sin vibraciones inusuales a 45 km/h o a la velocidad máxima de diseño si es menor / *Exiting of a curve of Rc ≤ 40 m without any unusual vibration at 45 km/h or at the maximum design speed if this is lower* .....*CORRECT*

No hay vibraciones inusuales ni correcciones al manillar/volante circulando a 160 km/h o 0.8 x V_{max} si V_{max} < 200 km/h / *No evidence of vibrations neither steering corrections by traveling at 160 km/h or 0.8 x V_{max} if V_{max} < 200 km/h* .....*CORRECT*

Lugar del ensayo / *Test place* : CVTRI, Chongqing (China)
Fecha del ensayo / *Test date* : 20.09.2024

Anpeng(apple) Li
INGENIERO DE HOMOLOGACIONES
HOMOLOGATION ENGINEER

APÉNDICE / *APPENDIX* TEV/3/2014/XV

REQUISITOS APLICABLES A LA INSTALACIÓN DE NEUMÁTICOS /
REQUIREMENTS REGARDING THE INSTALLATION OF TYRES

Reglamento Delegado (UE) / *Delegated Regulation (EU)* No 3/2014/XV*2016/1824

IDENTIFICACIÓN DEL VEHÍCULO PRESENTADO AL ENSAYO /
IDENTIFICATION OF THE VEHICLE SUBMITTED FOR TEST

Marca / *Make* (1)	:	JINMA
Tipo / *Type* (1)	:	TEV
Variante/versión ensayada / *Tested variant/version* (1)	:	00/01
Variantes/versiones cubiertas / *Covered variants/versions* (1)	:	00/00, 00/01, 00/02, 01/00, 01/01, 01/02
Categoría, subcategoría y sub-subcategoría / *Category, subcategory and sub-subcategory*	:	L7e-CU
Nº de bastidor / *Frame number*	:	R3W8AZKY3RA000002
Fecha de recepción de la muestra / *Date sample received*	:	10.08.2024

(1) Información proporcionada por el cliente. El laboratorio no se hace responsable de dicha información /
Information provided by the client. The laboratory is not responsible for such information

DATOS DE LOS NEUMÁTICOS / *TYRE DATA*

NEUMÁTICO / *TYRE*	**1er eje / *1st axle***	**2º eje / *2nd axle***
Contraseña de homologación / *Type-approval mark*	1. E4 30R-0259296 2. E4-30R-0271340	1. E4 30R-0259296 2. E4-30R-0271340
Marca de fábrica o comercial y modelo / *Trade name or make and model*	1. GREEN-MAX / HP010 2. GOODRIDE / RP18	1. GREEN-MAX / HP010 2. GOODRIDE / RP18
Designación medida / *Tyre size designation*	175/65R14	175/65R14
Tipo utilización / *Category of use*	1. Normal 2. Snow	1. Normal 2. Snow
Estructura del neumático / *Tyre structure*	Radial	Radial
Símbolo categoría velocidad / *Speed category symbol*	H	H
Índice capacidad de carga / *Load-capacity index*	82	82
Dimensión montaje neum./llanta / *Cross section profile dimension/rim*	5.5*14	5.5*14

Montaje del neumático / *Tyre fitting*

Neumáticos del mismo tipo montados sobre un mismo eje /
Tyres fitted to a given axle are of the same type .....*CORRECT*

El neumático no interfiere con la carrocería en el caso de dimensiones y recorrido de suspensión más desfavorable / *Tyres have unrestricted movement within the suspension, steering and wheel guard constrains provided by the vehicle manufacturer* .....*CORRECT*

Distancia entre la envolvente máxima del neumático y la estructura del vehículo /
Clearance between the tyre's maximum envelope and vehicle structure .....*CORRECT*

Capacidad de carga / *Load capacity*

Nivel de carga máxima de los neumáticos / *Maximum load rating* .....*CORRECT*

Capacidad de velocidad / *Speed capability*

Compatibilidad del símbolo de velocidad /
Compatibility of speed category symbol.....*CORRECT*

Neumáticos de nieve o multiservicio /
Snow or multiservice tyres.....*CORRECT*

CASOS ESPECIALES / *SPECIAL CASES*

Vehículos con neumáticos homologados según Directiva 92/23/CEE, Reglamento (UE) 661/2008 o UN-Reglamento 106 y adecuados para las condiciones de funcionamiento del vehículo / *Vehicles with tyres approved according to Directive 92/23, Regulation EU 661/2009 or Regulation UNECE N°106 and suitable for the vehicle's operating conditions* .....*CORRECT*

Vehículos de categorías L1e, L2e y L6e con una MMTA ≤ 150 kg con neumáticos no homologados con un ancho de sección ≤ 67 mm / *Vehicles of categories L1e, L2e and L6e with TPMM ≤ 150kg fitted with non-type-approved tyres with a section width ≤ 67 mm* .....*NOT APPLICABLE*

PRESIÓN NEUMÁTICOS / *TYRE PRESSURES*

Etiqueta en el vehículo / *Label attached to the vehicle* .....*CORRECT*

Situación y fijación / *Location and fixing method*.....*CORRECT*

Información incluida en el manual de usuario /
Information stated on owner's manual .....*CORRECT*

Lugar del ensayo / *Test place* : CVTRI, Chongqing (China)
Fecha del ensayo / *Test date* : 16.10.2024

Anpeng(apple) Li
INGENIERO DE HOMOLOGACIONES
HOMOLOGATION ENGINEER

APÉNDICE / *APPENDIX* TEV/3/2014/XVII

REQUISITOS APLICABLES A LA PROTECCIÓN DE LOS OCUPANTES DEL VEHÍCULO, INCLUIDO EL ACONDICIONAMIENTO INTERIOR Y LAS PUERTAS DEL VEHÍCULO / *REQUIREMENTS REGARDING VEHICLE OCCUPANT PROTECTION, INCLUDING INTERIOR FITTINGS AND VEHICLE DOORS*

Reglamento Delegado (UE) / *Delegated Regulation (EU)* No 3/2014/XVII*2016/1824

IDENTIFICACIÓN DEL VEHÍCULO PRESENTADO AL ENSAYO / *IDENTIFICATION OF THE VEHICLE SUBMITTED FOR TEST*

Marca / *Make* [(1)]	:	JINMA
Tipo / *Type* [(1)]	:	TEV
Variantes/versiones ensayadas / *Tested variants/versions* [(1)]	:	00/01
Variantes/versiones cubiertas / *Covered variants/versions*	:	00/00, 00/01, 00/02, 01/00, 01/01, 01/02
Categoría, subcategoría y sub-subcategoría / *Category, subcategory and sub-subcategory*	:	L7e-CU
Nº de bastidor / *Frame number*	:	R3W8AZKY3RA000002
Fecha de recepción de la muestra / *Date sample received*	:	10.08.2024

[(1)] Información proporcionada por el cliente. El laboratorio no se hace responsable de dicha información / *Information provided by the client. The laboratory is not responsible for such information*

RESULTADOS DE ENSAYO RESPECTO A LAS ZONAS INTERIORES / *TEST RESULTS CONCERNING INTERIORS ZONES*

El vehículo cumple con las prescripciones de un vehículo carrozado / *The vehicle fulfils the prescriptions for a bodied vehicle*.....*CORRECT*

- Zona interior 1 / *Interior zone 1*

  Los bordes que entran en contacto con el aparato de medición cumplen con las prescripciones del reglamento / *Edges which are in contact with the testing device are according with this regulation* .....*CORRECT*

- Zona interior 2 / *Interior zone 2*

  Los bordes que entran en contacto con el aparato de medición cumplen con las prescripciones del reglamento / *Edges which are in contact with the testing device are according with this regulation*.....*CORRECT*

- Zona interior 3 / *Interior zone 3*

  Los bordes que entran en contacto con el aparato de medición cumplen con las prescripciones del reglamento / *Edges which are in contact with the testing device are according with this regulation* .....*NOT APPLICABLE*

RESULTADOS DE ENSAYO RESPECTO A LAS PUERTAS DEL VEHÍCULO /
TEST RESULTS CONCERNING VEHICLE DOORS

Cada puerta está provista de un dispositivo que mantiene la puerta cerrada /
Each door is fitted with a device keeping it in a closed position .....*CORRECT*

Punto de aplicación de la fuerza / *Force application point*

En el centro de la puerta / *Onto the door center*.....*CORRECT*

En un punto situado en el plano vertical transversal que pasa por el punto R hasta 500 mm por encima de este / *Onto a point located in the transversal vertical plane passing through the R-point up to 500 mm above it*.
Altura / *Height*: 250 mm.....*NOT APPLICABLE*

Fuerza aplicada / *Applied force*

Cada puerta es capaz de resistir, durante al menos 0.2 segundos y sin fallar, soltarse o abrirse, una fuerza horizontal hacia el exterior de 2000 N /
Each door is capable of withstanding within 0.2 seconds and without fail, release or open completely a push force of 2000 N

Puerta del conductor / *Driver's door* : 2081 N .....*CORRECT*

Puerta del pasajero / *Passenger's door* : 2021 N .....*CORRECT*

Lugar del ensayo / *Test place* : CVTRI, Chongqing (China)
Fecha del ensayo / *Test Date* : 17.10.2024

Anpeng(apple) Li
INGENIERO DE HOMOLOGACIONES
HOMOLOGATION ENGINEER

APÉNDICE / *APPENDIX* TEV/3/2014/XVIII

REQUISITOS RELATIVOS A LA POTENCIA NOMINAL CONTINUA MÁXIMA O A LA POTENCIA NETA MÁXIMA Y/O A LA LIMITACIÓN DE LA VELOCIDAD MÁXIMA DEL VEHÍCULO POR CONSTRUCCIÓN / *REQUIREMENTS REGARDING MAXIMUM CONTINUOUS RATED OR NET POWER AND/OR MAXIMUM VEHICLE SPEED LIMITATION BY DESIGN*

Reglamento Delegado (UE) / *Delegated Regulation (EU)* No. 3/2014/XVIII*2016/1824

IDENTIFICACIÓN DEL VEHÍCULO PRESENTADO AL ENSAYO / *IDENTIFICATION OF THE VEHICLE SUBMITTED FOR TEST*

Marca / *Make* (1)	:	JINMA
Tipo / *Type* (1)	:	TEV
Variantes/versiones ensayadas / *Tested variants/versions* (1)	:	00/01, 01/01
Variantes/versiones cubiertas / *Covered variants/versions*	:	00/00, 00/01, 00/02, 01/00, 01/01, 01/02
Categoría, subcategoría y sub-subcategoría / *Category, subcategory and sub-subcategory*	:	L7e-CU
Nº de bastidor / *Frame number*	:	Variant 00: R3W8AZKY3RA000002 Variant 01: R3W8AZKX4RA000002
Fecha de recepción de la muestra / *Date sample received*	:	10.08.2024

(1) Información proporcionada por el cliente. El laboratorio no se hace responsable de dicha información / *Information provided by the client. The laboratory is not responsible for such information*

- Motor eléctrico / *Electric motor*

Marca / *Make*	:	ROCK
Tipo/Nº motor / *Type/Engine No.*	:	Variant 00: TZ155XPS110B / JMPAPSDM00133 Variant 01: TZ155MPS092 / JMR4PSDM00001
Potencia máxima / *Maximum power*	:	Variant 00: 19,0 kW a / *at* 4800 min^{-1} Variant 01: 10,0 kW a / *at* 5300 min^{-1}
Unidad de control del motor eléctrico / *Electric motor control unit*	:	Variant 00: ROCK / KTZ09X40PS1048 Variant 01: ROCK / KTZ09M45PS560
Control de potencia / *Power control*	:	---

- Caja de cambios / *Gearbox*

Tipo / *Type*	:	Automatic / *Automatic*
Relación final / *Final drive ratio*	:	Variant 00: 10,400, Variant 01: 12,603

- Velocidad máxima declarada / *Maximum declared speed* : Variant 00: 80 km/h, Variant 01: 65 km/h

- Neumáticos / *Tyres*

	Dimensiones / *Size*	Presión / *Pressure* (kPa)
Delantero / *Front*	175/65R14	300
Trasero / *Rear*	175/65R14	300

- Condiciones de carga del vehículo / *Load conditions of the vehicle*:

Variant 00:

	P.O.M.(2) + Baterías / *M.R.O.*(2) + *Batteries* (kg)	P.O.M. + Baterías + Conductor / *M.R.O. + Batteries + Driver* (kg)
Delantero / *Front*	547	578
Posterior / *Rear*	258	361
TOTAL	805	939

(2) Peso en orden de marcha / *Mass in running order*

Variant 01:

	P.O.M.(2) + Baterías / *M.R.O.*(2) + *Batteries* (kg)	P.O.M. + Baterías + Conductor / *M.R.O. + Batteries + Driver* (kg)
Delantero / *Front*	545	588
Posterior / *Rear*	215	306
TOTAL	760	894

(2) Peso en orden de marcha / *Mass in running order*

- Vehículo limitado al menos por dos de los siguientes métodos / *Vehicle limited by at least two of the following methods*:

  Reducción de la potencia máxima de uno o más motores eléctricos en función de la velocidad del vehículo o de rotación / *Reduction of the maximum power output of one or more electrics motors based on the vehicle or rotation speed*:

  Detectada internamente al motor eléctrico / *Sensed internally to the electric motor*.....*CORRECT*

  Detectada externamente al motor eléctrico / *Sensed fully externally to the electric motor*.....*NOT APPLICABLE*

  Limitación física de la velocidad del vehículo por medio de componentes internos o externos / *Physical vehicle speed limitation by means of internal or external components*.....*CORRECT*

  El fabricante utiliza un método de limitación alternativo a los listados previamente siguiendo las premisas del punto 1.1.2.6. / *The manufacturer uses an alternative limitation method other than those listed above following point 1.1.2.6.* .....*NOT APPLICABLE*

  Observación / *remark*:

Al menos dos de los ajustes anteriores se han llevado a cabo /
At least, it have been carried out two of the previous adjustings .....*CORRECT*

Estos métodos de limitación trabajan de manera independiente entre sí /
These limitation methods operate independently of each other .....*CORRECT*

El vehículo cumple con los límites de velocidad y potencia establecidos en el anexo I del Reglamento (UE) Nº 168/2013 con los métodos de limitación / *The vehicle meets the maximum vehicle speed and maximum continuous rated or net power requirements in Annex I to Regulation (EU) No 168/2013 with the methods used for limitation* .....CORRECT

Lugar del ensayo / *Test place* : CVTRI, Chongqing (China)
Fecha del ensayo / *Test date* : 16.10.2024

Anpeng(apple) Li
INGENIERO DE HOMOLOGACIONES
HOMOLOGATION ENGINEER

APÉNDICE / *APPENDIX* TEV/3/2014/XIX

REQUISITOS RELATIVOS A LA INTEGRIDAD DE LA ESTRUCTURA DEL VEHÍCULO / *REQUIREMENTS REGARDING VEHICLE STRUCTURE INTEGRITY*

Reglamento Delegado (UE) / *Delegated Regulation (EU)* No. 3/2014/XIX*2016/1824

IDENTIFICACIÓN DEL VEHÍCULO / *IDENTIFICATION OF THE VEHICLE*

Marca / *Make*	:	JINMA
Tipo / *Type*	:	TEV
Variante/Versiónes / *variant/versions*	:	00/00, 00/01, 00/02, 01/00, 01/01, 01/02
Categoría, subcategoría y sub-subcategoría / *Category, subcategory and sub-subcategory*	:	L7e-CU

Declaración del fabricante de la integridad de la estructura del vehículo / *Manufacturer vehicle structure integrity statement* .....*CORRECT*

Lugar / *Place* : Hongkong, China
Fecha / *Date* : 31.10.2024

Anpeng(apple) Li
INGENIERO DE HOMOLOGACIONES
HOMOLOGATION ENGINEER

APÉNDICE / *APPENDIX* TEV/44/2014/II

REQUISITOS APLICABLES A LAS MEDIDAS DE PREVENCIÓN DE LA MANIPULACIÓN DEL GRUPO MOTOPROPULSOR (ANTIMANIPULACIÓN) / *REQUIREMENTS APPLYING TO POWERTRAIN TAMPERING PREVENTION MEASURES (ANTI-TAMPERING)*

Reglamento Delegado (UE) / *Delegated Regulation (EU)* No. 44/2014/II*2018/295

IDENTIFICACIÓN DEL VEHÍCULO PRESENTADO AL ENSAYO / *IDENTIFICATION OF THE VEHICLE SUBMITTED FOR TEST*

Marca / *Make* [1]	:	JINMA
Tipo / *Type* [1]	:	TEV
Variantes/Versión / *Variants/Version* [1]	:	00/01, 01/01
Categoría y subcategoría / *Category and subcategory*	:	L7e-CU
Nº de bastidor / *Frame number*	:	Variant 00: R3W8AZKY3RA000002 Variant 01: R3W8AZKX4RA000002
Fecha de recepción de la muestra / *Date sample received*	:	10.08.2024

[1] Información proporcionada por el cliente. El laboratorio no se hace responsable de dicha información / *Information provided by the client. The laboratory is not responsible for such information*

ESPECIFICACIONES DEL VEHÍCULO / *SPECIFICATIONS OF THE VEHICLE*

- Motor / *Engine*

Marca / *Make*	:	ROCK
Tipo / *Type*	:	Variant 00: TZ155XPS110B, Variant 01: TZ155MPS092
Corriente / *Current*	:	Alterna/~~Continua~~ / *Alternating*/~~*Direct*~~
Tensión de trabajo / *Operating voltage*	:	63,4 V AC
Unidad de control del motor eléctrico / *Electric motor control unit*	:	Variant 00: ROCK / KTZ09X40PS1048 Variant 01: ROCK / KTZ09M45PS560
Control de potencia / *Power control*	:	---
Potencia máxima en 30 minutos / *Maximum 30 minutes power*	:	Variant 00: 14,8 kW a / *at* 5100 min^{-1} Variant 01: 7,5 kW a / *at* 5900 min^{-1}
Potencia neta máxima / *Maximum net power*	:	Variant 00: 19,0 kW a / *at* 4800 min^{-1} Variant 01: 10,0 kW a / *at* 5300 min^{-1}

- Velocidad máxima declarada / *Maximum declared speed* : Variant 00: 80 km/h, Variant 01: 65 km/h

REQUISITOS GENERALES / *GENERAL PROVISIONS*

El fabricante declara que no comercializa componentes intercambiables que puedan aumentar el rendimiento de la unidad de propulsión / *The manufacturer declares not to market interchangeable components which could enable an increase in propulsion unit performance* ..... *CORRECT*

La intercambiabilidad de piezas no idénticas no incrementa el rendimiento de la unidad de propulsión por encima de los valores medidos y notificados en la homologación / *The interchangeability of non-identical parts does not increase the performances of the propulsion unit exceeding the values measured and reported at the type-approval.* ..... *CORRECT*

Intercambiabilidad de piezas no idénticas / *Interchangeability of non-identical parts* ..... *NOT APPLICABLE*

El número de dientes aparece en los piñones / *Teeth number is displayed on the pinions* ..... *NOT APPLICABLE*

Encendido y avance / *Ignition and advance* ..... *NOT APPLICABLE*

Prescripciones para vehículos equipados de dispositivos limitadores de velocidad eléctricos o electrónicos / *Provisions for vehicles equipped with electrical/electronic devices which limit its speed* ..... *CORRECT*

Declaración del fabricante conforme a que las modificaciones por él facilitadas no incrementan el rendimiento de la unidad de propulsión / *Statement by the manufacturer according to the facilitated modification do not increase the propulsion unit performance* ..... *CORRECT*

Sistemas electrónicos / *Electronic systems*:

Los parámetros de rendimiento de la unidad de propulsión están protegidos / *Computer-coded propulsion unit parameters are protected* ..... *CORRECT*

Los parámetros de funcionamiento o códigos informáticos reprogramables tienen un nivel de protección ISO 15031-7:2001 o equivalente cuando se use un conector estándar de diagnóstico / *Any reprogrammable computer codes or operating parameter have a level of protection at least ISO 15031-7:2001 provided that a standardized diagnostic connector is used* ..... *CORRECT*

Los parámetros operativos de propulsión codificados por ordenador no son intercambiables sin el uso de herramientas y procedimientos especiales / *Computer-coded propulsion operating parameters shall not be changeable without the use of specialised tools and procedures* ..... *CORRECT*

Los chips de memoria extraíbles están encapsulados, alojados en una caja sellada o protegidos mediante algoritmos electrónicos / *Any removable calibration memory chips potted, encased in a sealed container or protected by electronic algorithms* ..... *CORRECT*

Los fabricantes que utilizan sistemas de códigos informáticos programables impiden la reprogramación no autorizada / *Manufacturers using programmable computer code systems deter unauthorised reprogramming* ..... *CORRECT*

Los códigos de problemas de diagnóstico almacenados a bordo no se borran si el ordenador a bordo se desconecta / *Stored on-board diagnostic trouble codes don't get erased by disconnection of the on board computer*.....*CORRECT*

REQUISITOS ESPECIFICOS / *SPECIFIC REQUIREMENTS* (L3e-A2, L4e-A2 & L7e)

L3e-A2, L4e-A2

La potencia nominal continua máxima del motor de cualquier variante/versión dentro del mismo tipo no excede el doble de dicha potencia / *Any variants/versions of the vehicle type not have a maximum net engine power that exceed the double of that power*.....*NOT APPLICABLE*

El fabricante declara que la modificación e intercambiabilidad de los componentes no dará lugar a un aumento de potencia más del doble / *Manufacturer declares that modifications and interchangeability of the characteristics and component doesn't exceed the double of the power* .....*NOT APPLICABLE*

L7e

El fabricante declara que la modificación e intercambiabilidad de los componentes no dará lugar a un redimiento de la unidad de propulsión superior al homologado / *Manufacturer declares that modifications and interchangeability of the characteristics and component doesn't exceed the approved proplsion unit perfomance*.....*CORRECT*

Lugar del ensayo / *Test place* : CVTRI, Chongqing (China)
Fecha del ensayo / *Test date* : 16.10.2024

Anpeng(apple) Li
INGENIERO DE HOMOLOGACIONES
HOMOLOGATION ENGINEER

APÉNDICE / *APPENDIX* TEV/44/2014/IV

REQUISITOS APLICABLES A LA CONFORMIDAD DE LA PRODUCCIÓN / *REQUIREMENTS APPLYING TO CONFORMITY OF PRODUCTION*

Reglamento Delegado (UE) / *Delegated Regulation (EU)* No. 44/2014/IV*2018/295

IDENTIFICACIÓN DEL VEHÍCULO / *IDENTIFICATION OF THE VEHICLE*

Marca / *Make*	:	JINMA
Tipo / *Type*	:	TEV
Variantes/Versiones / *Variants/Versions*	:	00/00, 00/01, 00/02, 01/00, 01/01, 01/02
Categoría, subcategoría y sub-subcategoría / *Category, subcategory and sub-subcategory*	:	L7e-CU

La autoridad de homologación ha verificado la existencia de disposiciones y procedimientos satisfactorios establecidos por el fabricante para garantizar el control eficaz, de manera que los vehículos, sistemas, componentes o unidades técnicas independientes en el momento de la producción sean conformes con el tipo homologado / *The approval authority has verified the existence of satisfactory arrangements and procedures established by the manufacturer for ensuring effective control so that vehicles, systems, components or separate technical units when in production conform to the approved type* ..... *CORRECT*

Lugar del ensayo / *Test place*	:	Hongkong, China
Fecha del ensayo / *Test date*	:	31.10.2024

Anpeng(apple) Li
INGENIERO DE HOMOLOGACIONES
HOMOLOGATION ENGINEER

APÉNDICE / *APPENDIX* TEV/44/2014/VI

DISPOSITIVO DE PROTECCIÓN CONTRA EL USO NO AUTORIZADO /
DEVICE TO PREVENT UNAUTHORIZED USE

Reglamento Delegado (UE) / *Delegated Regulation (EU)* No. 44/2014/VI*2018/295

IDENTIFICACIÓN DEL VEHÍCULO / *VEHICLE IDENTIFICATION*

Marca / *Make*	:	JINMA
Tipo / *Type*	:	TEV
Variante/versione ensayadas / *Tested variant/version*	:	00/01
Variantes/versiones cubiertas / *Covered variants/versions*	:	00/00, 00/01, 00/02, 01/00, 01/01, 01/02
Categoría, subcategoría y sub-subcategoría / *Category, subcategory and sub-subcategory*	:	L7e-CU
Nº de bastidor / *Frame number*	:	R3W8AZKY3RA000002
Fecha de recepción de la muestra / *Date sample received*	:	10.08.2024
Tipo de dispositivo / *Type of device*	:	Actúa sobre la dirección / *Acting on the steering*
Descripción del dispositivo / *Description of device*	:	Mecánico de pasador que, conectado previamente, bloquea la dirección y corta la corriente del motor / *Mechanical pin that, preloaded, blocks the steering at the same time as cuts off the motor current*

(1) Información proporcionada por el cliente. El laboratorio no se hace responsable de dicha información / *Information provided by the client. The laboratory is not responsible for such information*

PRESCRIPCIONES GENERALES / *GENERAL PRESCRIPTIONS*

Necesidad de desconexión para permitir activar el motor con el control normal / *Necessity to put it out of action in order to enable the engine to be started by means of the normal control*.....*CORRECT*

Necesidad de desconexión para dirigir, conducir o desplazar hacia delante por sus medios el vehículo / *Necessity to disable in order to steer, drive or move forward the vehicle by its power* .....*CORRECT*

Activación y desactivación con una sola utilización de una única llave / Activation and deactivation by the single application of one key .....*CORRECT*

No se puede retirar la llave antes de que el dispositivo esté activado / *Removal of the key not possible before the device has been set to act*.....*CORRECT*

Dificultad de manipulación con herramientas, instrumentos o artefactos simples o disponibles fácilmente / *Difficulty of manipulation using simple,* readily available tools, *equipment or fabrications* .....*CORRECT*

Instalación sólida y de serie / *Firm and standard installation* .....*CORRECT*

Mínimo de 1000 combinaciones de llaves /
There are at least 1000 key combinations .....*CORRECT*

Código de llave no visible / *The key code is not visible* .....*CORRECT*

Únicamente se puede girar el bombín ejerciendo un par inferior a 2.45 Nm con la llave correspondiente / *It is not possible to turn the lock cylinder with a torque of less than 2.45 Nm with anything other than the mating key*.....*CORRECT*

Aspectos de diseño (pasadores/~~discos~~) / *Design aspects (pins/~~discs~~)* .....*CORRECT*

No hay riesgo de bloqueo accidental mientras el vehículo está en movimiento /
No risk of accidental blockage, while the vehicle is in motion .....*CORRECT*

Se requiere un movimiento mínimo de 2 mm de la llave antes de activar el dispositivo o bien se dispone de un seguro que evita la extracción de la llave / *A minimum 2 mm movement of the key before activation of the device is required or an override preventing its accidental removal is present*.....*CORRECT*

El dispositivo se mantiene en su posición de funcionamiento exclusivamente por medios mecánicos / *The device is kept in its operating position by mechanical means only*.....*CORRECT*

No es posible activar la propulsión con su control normal si no se ha desactivado el sistema de bloqueo / *It is impossible to activate the vehicle's motive power by normal means until deactivation of the protective device*.....*CORRECT*

PRESCRIPCIONES PARTICULARES PARA DISPOSITIVOS QUE ACTÚAN SOBRE LA DIRECCIÓN / *SPECIFIC REQUERIMENTS FOR DEVICES ACTING ON THE STEERING*

Cuando el dispositivo de protección está preparado para ser activado, es imposible impedir que funcione / *When the protective device is set to act, it is not possible to prevent the device from functioning* .....*CORRECT*

El dispositivo ha superado el ensayo de desgaste especificado en el Anexo 3 (2500 ciclos en cada dirección) / *The device has undergone the wear test specified in Annex 3. (2500 cycles in each direction)* .....*CORRECT*

Dispositivo capaz de soportar un par estático de 200 Nm en ambos sentidos /
Device able to withstand a static torque of 200 Nm in both directions.....*CORRECT*

Si la llave puede ser extraída en una posición distinta a la de bloqueo, ésta no puede ser retirada por descuido / *If the key can be removed in a position other than the locked position, removing it cannot be done inadvertently* .....CORRECT

PRESCRIPCIONES PARTICULARES PARA DISPOSITIVOS QUE ACTÚAN SOBRE LA TRANSMISIÓN / *SPECIFIC REQUERIMENTS FOR DEVICES ACTING ON THE TRANSMISSION*

El dispositivo impide la rotación de las ruedas motrices *del vehículo* / *The device prevents the rotation of the vehicle's driving wheels* .....*NOT APPLICABLE*

Cuando el dispositivo de protección está preparado para ser activado, es imposible impedir que funcione / *When the protective device is set to act, it is not possible to prevent the device from functioning*.....*NOT APPLICABLE*

No es posible el bloqueo involuntario de la transmisión mientras la llave esta en el dispositivo / *It is not possible to block inadvertently the transmission when the key is in the lock of the protective device*.....*NOT APPLICABLE*

Resistencia dinámica del dispositivo (2500 ciclos en cada dirección) / *Dynamic resistance of device (2500 cycles in each direction)* .....*NOT APPLICABLE*

Si la llave puede ser extraída en una posición que no es la de bloqueo, ésta no puede ser retirada accidentalmente / *A key that can be removed in a position other than the locking position cannot be removed accidentally* .....*NOT APPLICABLE*

El dispositivo aguanta la aplicación estática en ambas direcciones de un par un 50% superior al que puede ser transmitido por el embrague o por la transmission automàtica / *The device withstands the static application in both directions of a torque 50 % greater than the maximum torque that can be transmitted by the clutch or by the automatic transmission* .....*NOT APPLICABLE*

PRESCRIPCIONES PARTICULARES PARA DISPOSITIVOS QUE ACTÚAN SOBRE LOS FRENOS / *SPECIFIC REQUERIMENTS FOR DEVICES ACTING ON THE BRAKES*

El dispositivo bloquea al menos una rueda a cada lado de al menos un eje / *At least one wheel on each side of at least one axle is braked by the device* .....*NOT APPLICABLE*

Cuando el dispositivo de protección está preparado para ser activado, es imposible impedir que funcione / *When the protective device is set to act, it is not possible to prevent the device from functioning*.....*NOT APPLICABLE*

No es posible el bloqueo accidental de los frenos mientras la llave esta en el dispositivo / *It is not possible the accidental blocking of the brakes when the key is in the lock of the protective device*.....*NOT APPLICABLE*

Resistencia dinámica del dispositivo (2500 ciclos en cada dirección) / *Dynamic resistance of device (2500 cycles in each direction)* .....*NOT APPLICABLE*

Una llave que puede ser extraída en una posición que no es la de bloqueo no puede ser retirada accidentalmente / *A key that can be removed in a position other than the locking position cannot be removed accidentally* .....*NOT APPLICABLE*

El dispositivo puede mantener estacionado el vehículo cargado en una pendiente de 18 % hacia arriba o hacia abajo / *Device capable of holding he laden vehicle stationary on an 18 % up or down-gradient*.....*NOT APPLICABLE*

PRESCRIPCIONES PARTICULARES PARA DISPOSITIVOS QUE ACTÚAN SOBRE EL CONTROL DEL CAMBIO DE MARCHAS / *SPECIFIC REQUERIMENTS FOR DEVICES ACTING ON THE GEARSHIFT CONTROL*

El dispositivo impide el cambio de marcha / *The device prevents from any change of gear* .....*NOT APPLICABLE*

Caja manual bloqueada en marcha atrás; adicionalmente se permite el bloqueo en punto muerto / *Manual gearbox locked in reverse; in addition locking in neutral is permitted*.....*NOT APPLICABLE*

Caja automática con posición de estacionamiento: es posible bloquearla en la posición de estacionamiento; adicionalmente se permite el bloqueo en punto muerto y/o marcha atrás / *Automatic gearbox provided with a "parking" position: it is possible to lock it in parking position or in reverse position and/or neutral position* .....*NOT APPLICABLE*

Caja automática sin posición de estacionamiento: es posible bloquearla en punto muerto o marcha atrás / *Automatic gearbox provided with a "parking" position: it is possible to lock it in reverse position and/or neutral position* .....*NOT APPLICABLE*

Resistencia dinámica del dispositivo (2500 ciclos en cada dirección) / *Dynamic resistance of device (2500 cycles in each direction)* .....*NOT APPLICABLE*

DISPOSITIVOS DE AVISO ADICIONALES / *ADDITIONAL WARNING DEVICES*

Tipo de dispositivo de aviso / *Type of warning device*:

Acústico / *acoustic* - ~~visual / *visual* - ambos / *both*~~

El dispositivo de aviso se activa al abrir la puerta del conductor si el sistema de protección no ha sido activado y todas las llaves han sido extraídas / *The warning device is activated when opening the driver's door if the protective device hasn't been activated and any key removed*.....*CORRECT*

Las señales acústicas son breves y no duran más de 30 segundos / *Acoustic signals are brief and end in no longer than 30 seconds* .....*CORRECT*

Las señales acústicas se reinician solo si el dispositivo de protección se activa de nuevo / *Acoustic signals recommence only if the protective device is actuated again*.....*CORRECT*

Señal acústica emitida por / *Acoustic signal emitted by*:

Avisador acústico del vehículo / ~~*Vehicle's audible warning device*~~ – Otros dispositivos / *Other devices*

Señal visual producida exclusivamente por las luces de cruce / *Visual signal produced solely by the flashing vehicle's passing lights* .....*NOT APPLICABLE*

Duración entre 25 segundos y 5 minutos después de la activación de la alarma /
Duration between 25 seconds and 5 minutes after alarm activation .....*NOT APPLICABLE*

La desactivación de la alarma interrumpe la señal óptica inmediatamente /
The unsetting of the alarm stops the optical signal immediately.....*NOT APPLICABLE*

Condiciones de parpadeo / *Flashing conditions*.....*NOT APPLICABLE*

DISPOSITIVOS PROVISTOS ADICIONALMENTE /
DEVICES PROVIDED ADDITIONALLY

Presencia de dispositivos opcionales suplementarios y con medios de activación separados para la protección del vehículo respecto a un uso no autorizado / *Presence of optional supplementary devices to prevent the unauthorized use of the vehicle requiring a separate means of activation* .....*NOT APPLICABLE*

Lugar del ensayo / *Test place* : CVTRI, Chongqing (China)
Fecha del ensayo / *Test date* : 16.10.2024

Anpeng(apple) Li
INGENIERO DE HOMOLOGACIONES
HOMOLOGATION ENGINEER

APÉNDICE / *APPENDIX* TEV/44/2014/VII

REQUISITOS APLICABLES A LA COMPATIBILIDAD ELECTROMAGNÉTICA (CEM) / *REQUIREMENTS APPLYING TO ELETROMAGNETIC COMPATIBILITY (EMC)*

Reglamento Delegado (UE) / *Delegated Regulation (EU)* No. 44/2014/VII*2018/295

IDENTIFICACIÓN DEL VEHÍCULO PRESENTADO AL ENSAYO / *IDENTIFICATION OF THE VEHICLE SUBMITTED FOR TEST*

Marca / *Make* [1]	:	JINMA
Tipo / *Type* [1]	:	TEV
Variantes/versione ensayadas / *Tested variants/version* [1]	:	00/01, 01/01
Variantes/versiones cubiertas / *Covered variants/versions* [1]	:	00/00, 00/01, 00/02, 01/00, 01/01, 01/02
Categoría, subcategoría y sub-subcategoría / *Category, subcategory and sub-subcategory*	:	L7e-CU
Nº de bastidor / *Frame number*	:	Variant 00: R3W8AZKY3RA000002 Variant 01: R3W8AZKX4RA000002
Fecha de recepción de la muestra / *Date sample received*	:	10.08.2024

ESPECIFICACIONES DEL VEHÍCULO / *SPECIFICACION OF THE VEHICLE*

- Motor / *Engine*

Marca / *Make* [1]	:	ROCK
Tipo/Nº motor / *Type/Engine No.*	:	Variant 00: TZ155XPS110B / JMPAPSDM00133 Variant 01: TZ155MPS092 / JMR4PSDM00001
Voltaje operative / *Operatationg voltage*	:	63,4 V AC
Potencia máxima / *Maximum power* [1]	:	Variant 00: 19,0 kW a / at 4800 min^{-1} Variant 01: 10,0 kW a / at 5300 min^{-1}
Ciclo / *Operating cycle*	:	Síncrono trifásico / *Synchronous three phases*
Unidad de control del motor eléctrico / *Electric motor control unit*	:	Variant 00: ROCK / KTZ09X40PS1048 Variant 01: ROCK / KTZ09M45PS560

- Caja de cambio / *Gearbox*

Tipo / *Type*	:	Automatic / *Automatic*
Nº velocidades / *No. of gear ratios*	:	Variant 00: 10,400, Variant 01: 12,603

- Batería / *Battery* [1]

Tipo / *Type*	:	Li-Ion
Capacidad / *Capacity*	:	Variant 00: 230 Ah, Variant 01: 150 Ah

- Velocidad máxima declarada / *Maximum declared speed* : Variant 00: 80 km/h, Variant 01: 65 km/h

[1] Información proporcionada por el cliente. El laboratorio no se hace responsable de dicha información / *Information provided by the client. The laboratory is not responsible for such information*

ENSAYOS ADICIONALES SIN REESS ACOPLADO A LA RED /
TEST WITHOUT REESS CHARGING MODE COUPLED TO THE POWER GRID

DISPOSICIONES SOBRE LA RADIACIÓN DE BANDA ANCHA /
REQUIREMENTS RELATING TO BROAD-BAND RADIATION FROM VEHICLES

Configuración del ensayo / *Configuration of test*:

De acuerdo con los requisitos prescritos en el Anexo 4 del Reglamento 10.06 CEPE /
According to requirements prescribed in the Annex 4 of Regulation 10.06 ECE

Distancia de medida / *Measuring distance* : 3 m

Tipo de detector / *Detector type* : Pico / *Peak*

- Resultados del ensayo / *Test results*

- Horizontal, lado derecho / *Horizontal, right-hand side*

Variant 00:

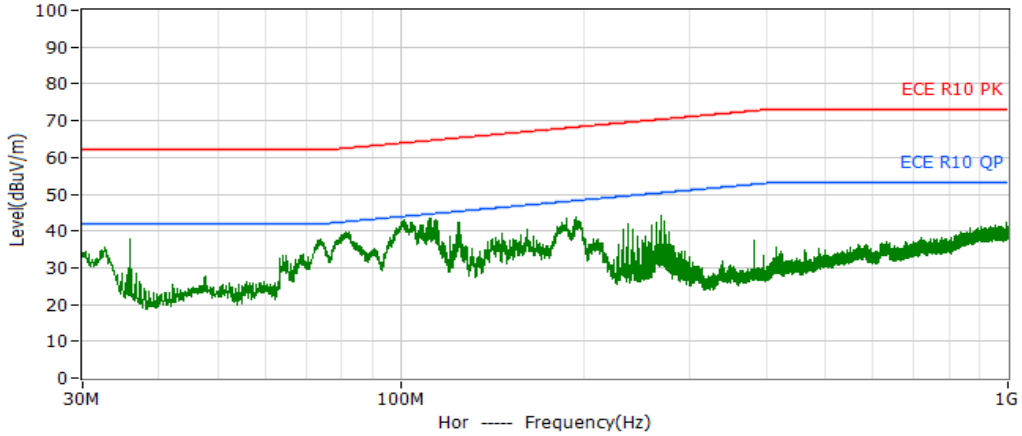

Variant 01:

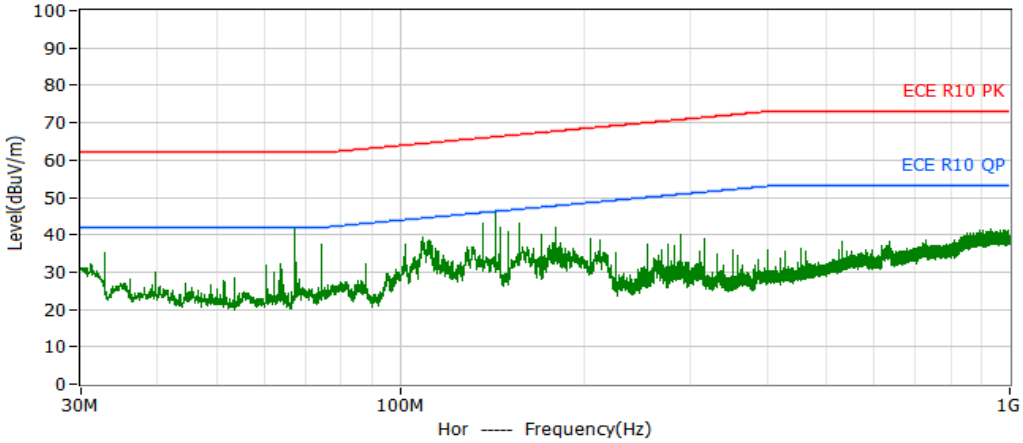

Green: Peak detector

- Vertical, lado derecho / *Vertical, right-hand side*

Variant 00:

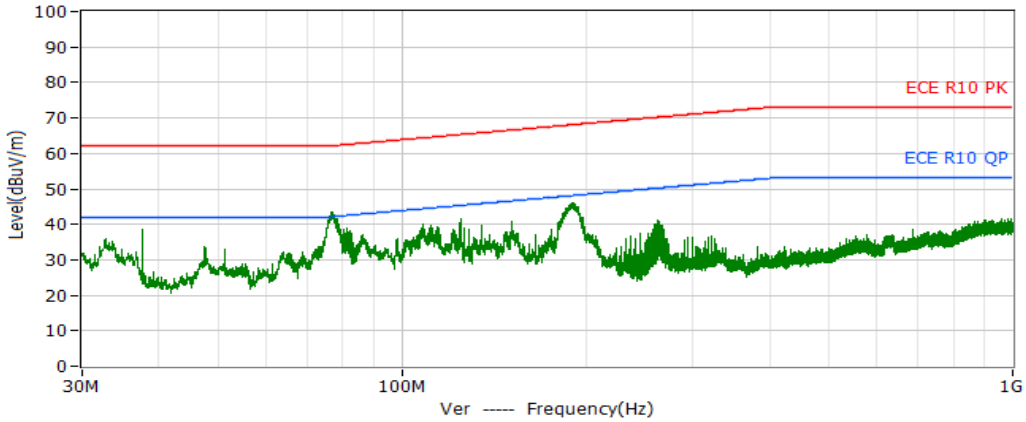

Variant 01:

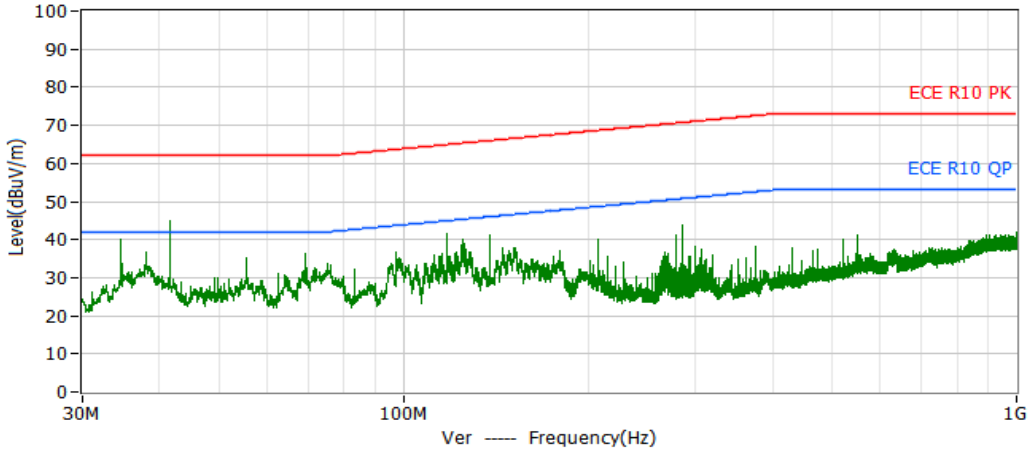

Green: Peak detector

- Horizontal, lado izquierdo / *Horizontal, left-hand side*

Variant 00:

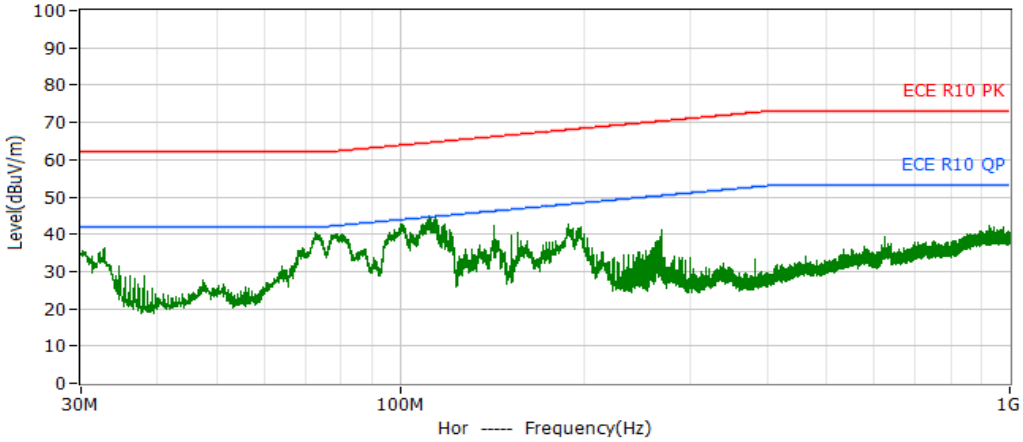

Variant 01:

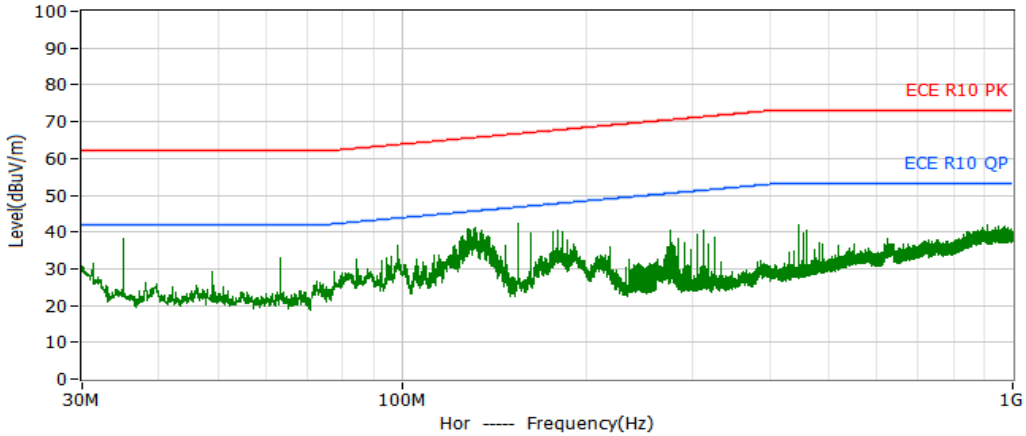

Green: Peak detector

- Vertical, lado izquierdo / *Vertical, left-hand side*

Variant 00:

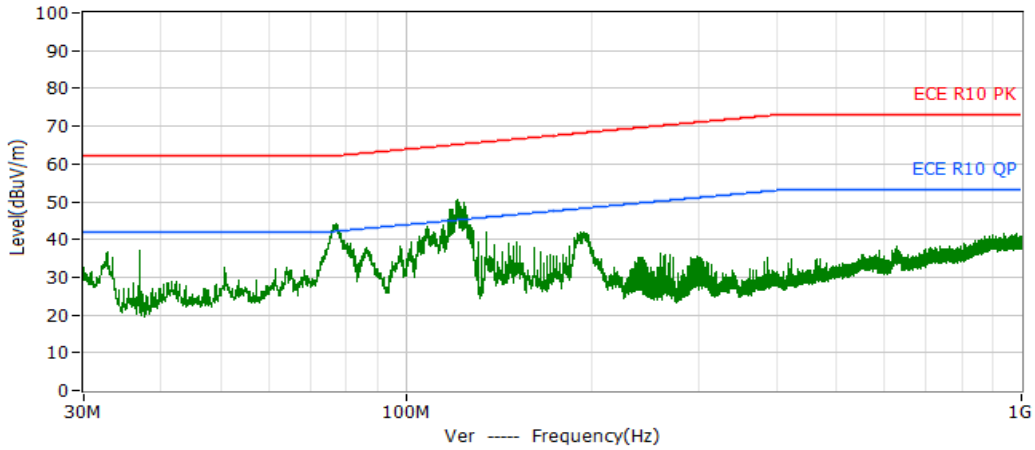

Variant 01:

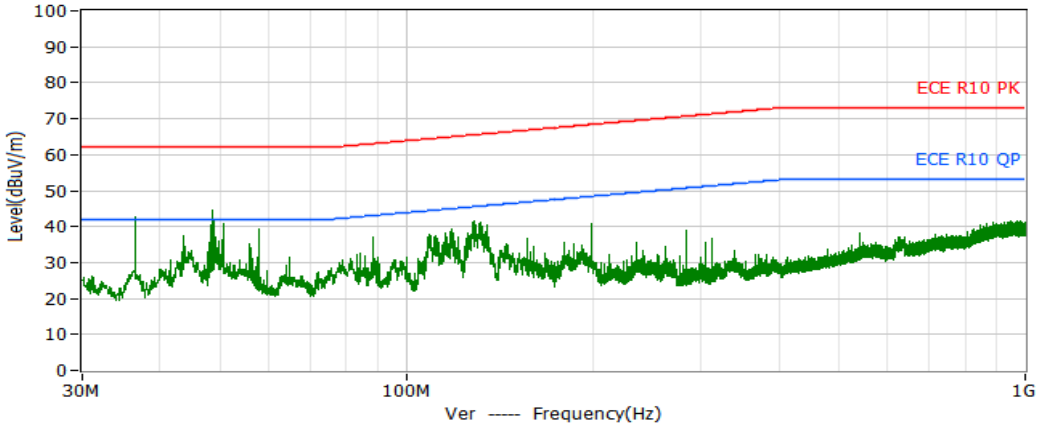

Green: Peak detector

Resultado de las disposiciones sobre la radiación de banda ancha /
Results relating to broad-band radiation.....*CORRECT*

DISPOSICIONES SOBRE LA RADIACIÓN DE BANDA ESTRECHA /
REQUIREMENTS RELATING TO NARROW-BAND RADIATION FROM VEHICLES

Configuración del ensayo / *Configuration of test:*

De acuerdo con los requisitos prescritos en el Anexo 5 del Reglamento 10.06 CEPE /
According to requirements prescribed in the Annex 5 of Regulation 10.06 ECE

Distancia de medida / *Measuring distance* : 3 m

Tipo de detector / *Detector type* : Media / *Average*

- Resultados del ensayo / *Test results*

- Horizontal, lado derecho / *Horizontal, right-hand side*

Variant 00:

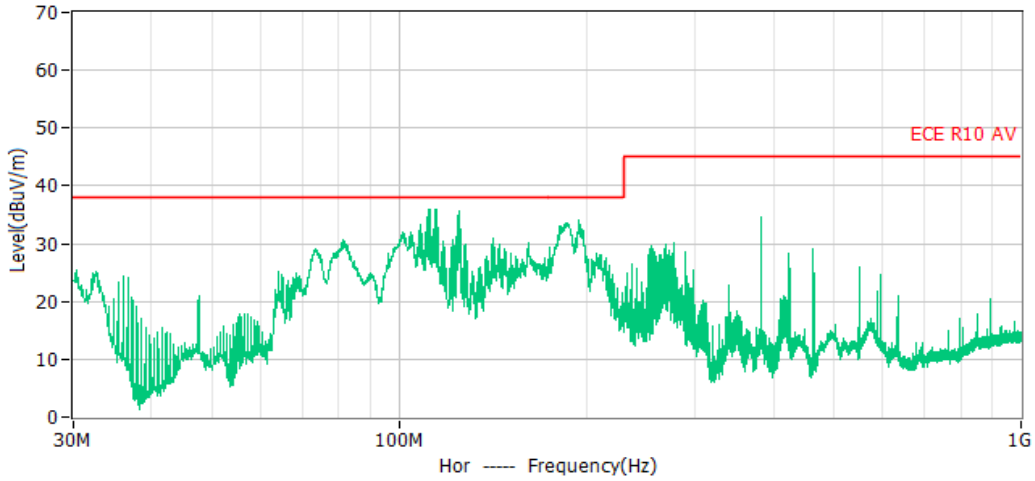

Variant 01:

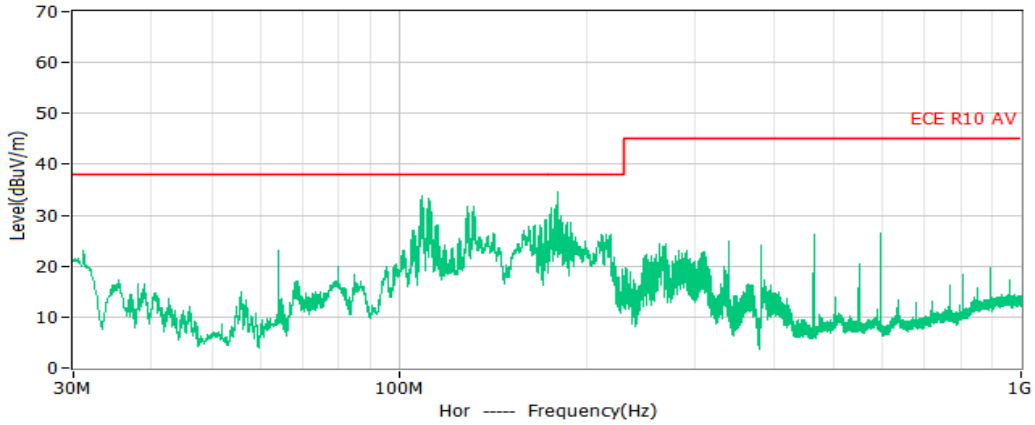

Green: Average detector

- Vertical, lado derecho / *Vertical, right-hand side*

Variant 00:

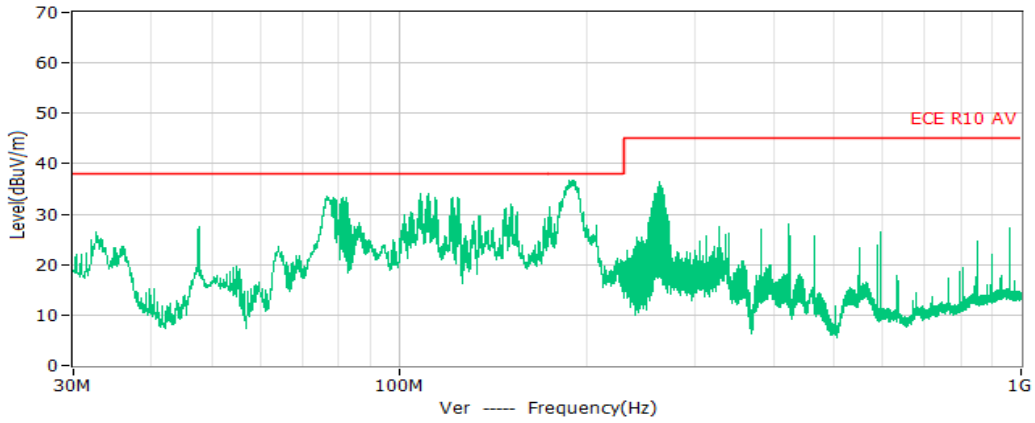

Variant 01:

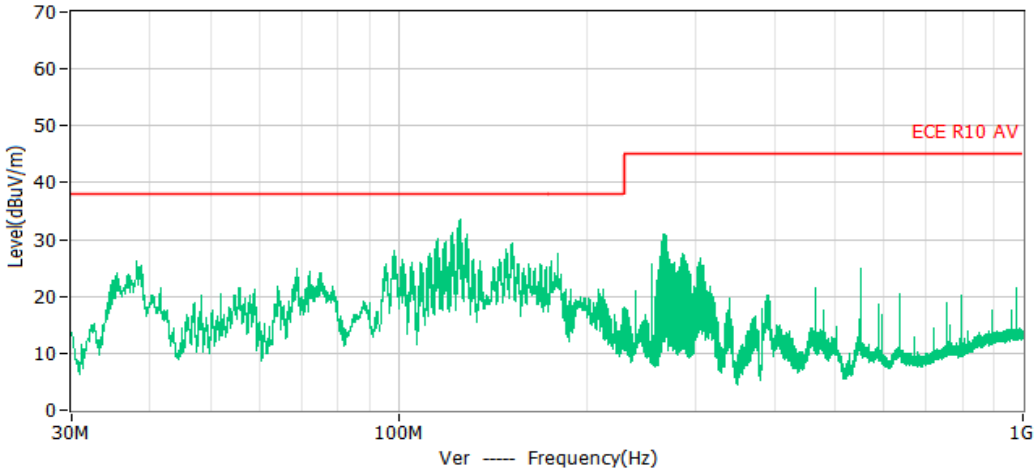

Green: Average detector

- Horizontal, lado izquierdo / *Horizontal, left-hand side*

Variant 00:

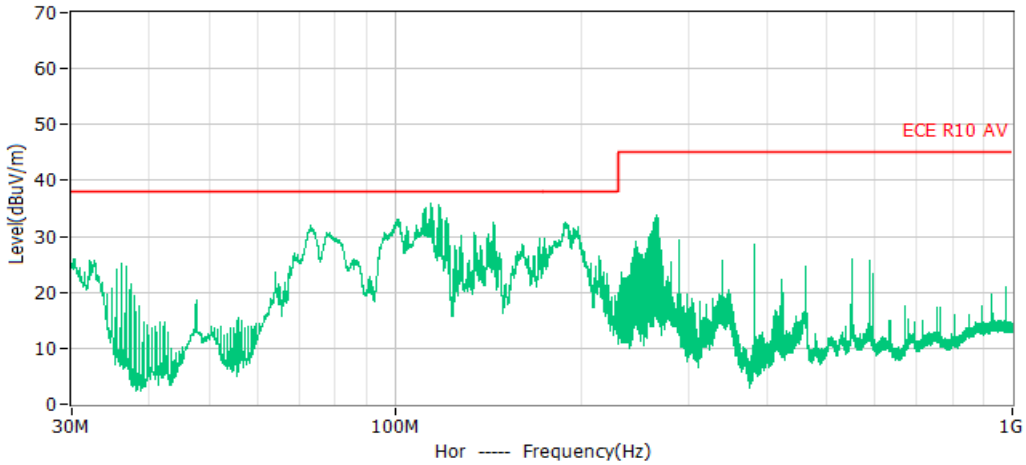

Variant 01:

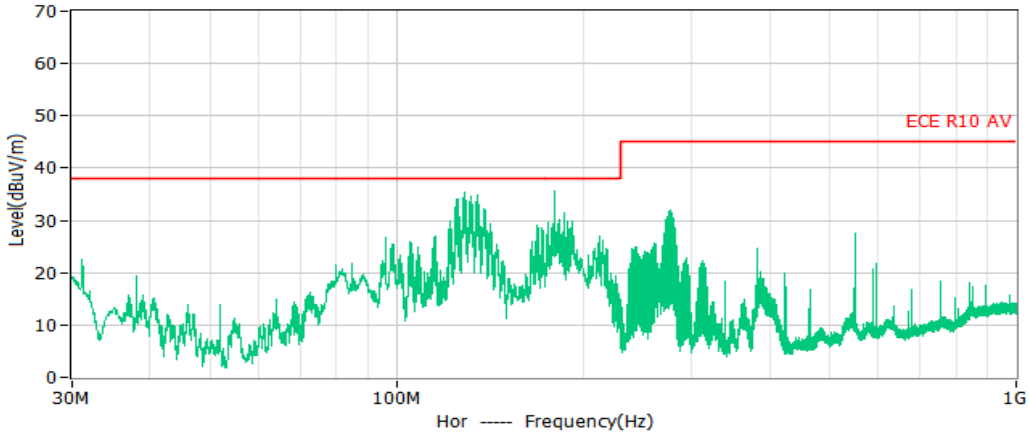

Green: Average detector

- Vertical, lado izquierdo / *Vertical, left-hand side*

Variant 00:

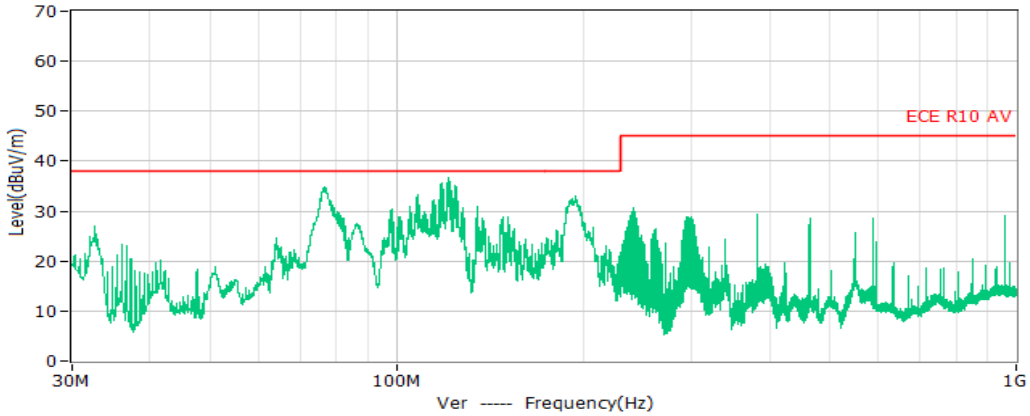

Variant 01:

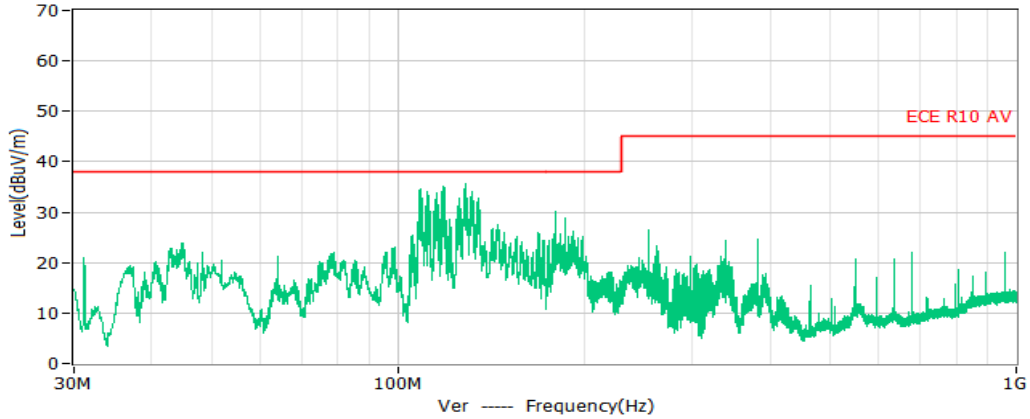

Green: Average detector

Resultado de las disposiciones sobre la radiación de banda estrecha /
Results relating to narrow-band radiation .....*CORRECT*

INMUNIDAD A LA RADIACIÓN ELECTROMAGNÉTICA /
IMMUNITY TO ELECTROMAGNETIC RADIATION

Configuración del ensayo / *Configuration of test:*

De acuerdo con los requisitos prescritos en el Anexo 6 del Reglamento 10.06 CEPE /
According to requirements prescribed in the Annex 6 of Regulation 10.06 ECE

- Funcionamiento vehículo / *Vehicle functioning*
Ciclo 50 km/h / *50 km/h cycle*

Intensidad de campo soportada por el vehículo /
Maximum field strength level : 30 V/m

Entre frecuencia de banda /
Between frequency band : 20-2000 MHz

Velocidad durante el ensayo /
Speed during the test : 50 km/h

Antenna	Biconical	Log. periodic.	Log. periodic.	Horn
Frequency	**20-80 MHz**	**80-800 MHz**	**800-1000 MHz**	**1-2 GHz**
Modulation	**AM**	**AM**	**PM**	**PM**
Polarity	**Vertical**	**Vertical**	**Vertical**	**Vertical**
Front Face	PASS	PASS	PASS	PASS

Radiated Immunity test results

Resultado de las disposiciones sobre la inmunidad a la radiación electromagnética /
Results relating to the immunity to electromagnetic radiation .....*CORRECT*

- Funcionamiento vehículo / *Vehicle functioning*

Ciclo de freno / *Brake cycle*

Intensidad de campo soportada por el vehículo /
Maximum field strength level : 30 V/m

Entre frecuencia de banda /
Between frequency band : 20-2000 MHz

Velocidad durante el ensayo /
Speed during the test : 0 km/h

Activación de las luces de circulación diurna o lucs frontal /
Activation of daytime running lamp or headlamp ..... *CORRECT*

Luz de freno encendida mediante la activación del pedal de freno /
Stop lights activated by depressing brake pedal ..... *CORRECT*

Antenna	Biconical	Log. periodic.	Log. periodic.	Horn
Frequency	**20-80 MHz**	**80-800 MHz**	**800-1000 MHz**	**1-2 GHz**
Modulation	**AM**	**AM**	**PM**	**PM**
Polarity	**Vertical**	**Vertical**	**Vertical**	**Vertical**
Front Face	PASS	PASS	PASS	PASS

Radiated Immunity test results

Resultado de las disposiciones sobre la inmunidad a la radiación electromagnética /
Results relating to the immunity to electromagnetic radiation ..... *CORRECT*

ENSAYOS ADICIONALES CON REESS ACOPLADO A LA RED /
ADITTIONAL TEST WITH REESS CHARGING MODE COUPLED TO THE POWER GRID

DISPOSICIONES SOBRE LA RADIACIÓN DE BANDA ANCHA EN LA CONFIGURACION DE REESS ACOPLADO A LA RED / *REQUIREMENTS RELATING TO BROAD-BAND RADIATION IN CONFIGURATION "REESS CHARGING MODE COUPLED TO THE POWER GRID"*

Configuración del ensayo / *Configuration of test:*

De acuerdo con los requisitos prescritos en el Anexo 4 del Reglamento 10.06 CEPE /
According to requirements prescribed in the Annex 4 of Regulation 10.06 ECE

Distancia de medida / *Measuring distance* : 3 m

Distancia de la red artificial /
Artificial network distance : 0.8 m

Tipo de detector / *Detector type* : Pico / *Peak*

- Resultados del ensayo / *Test results*

- Horizontal, lado derecho / *Horizontal, right-hand side*

Variant 00:

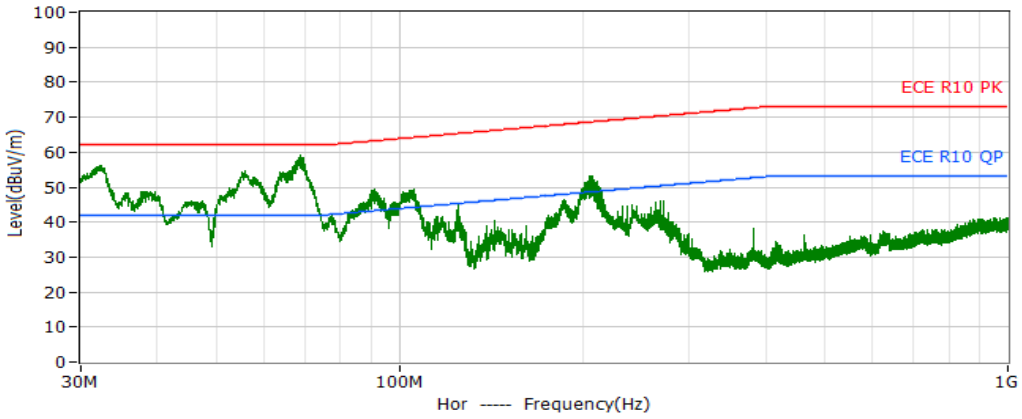

Variant 01:

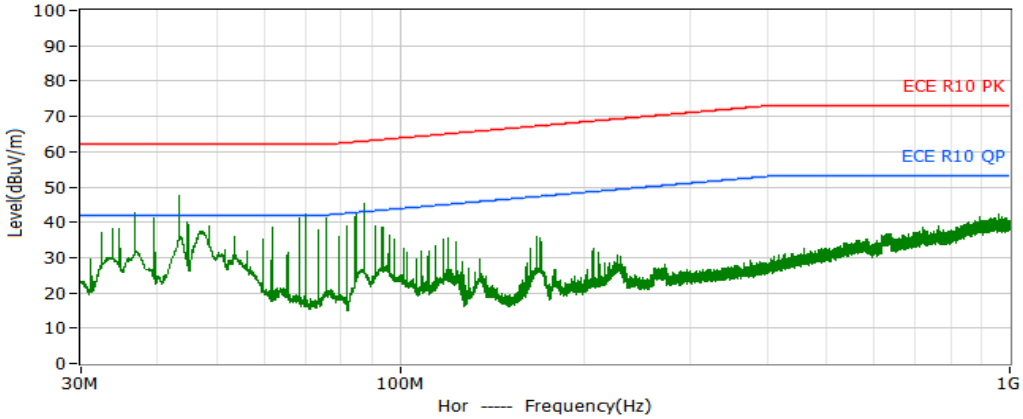

Green: Peak detector

- Vertical, lado derecho / *Vertical, right-hand side*

Variant 00:

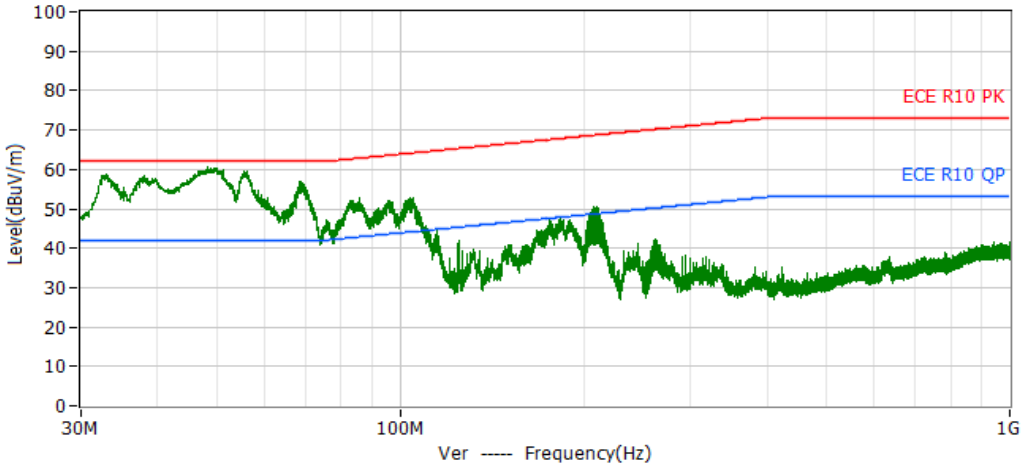

Variant 01:

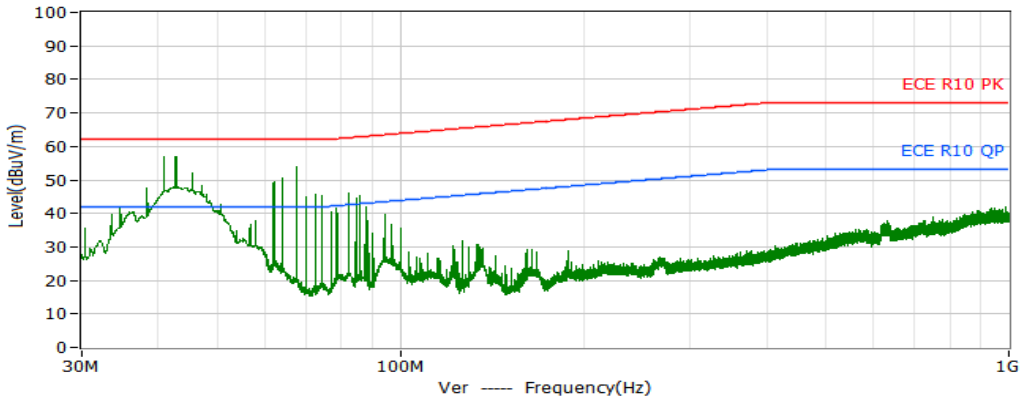

Green: Peak detector

- Horizontal, lado izquierdo / *Horizontal, left-hand side*

Variant 00:

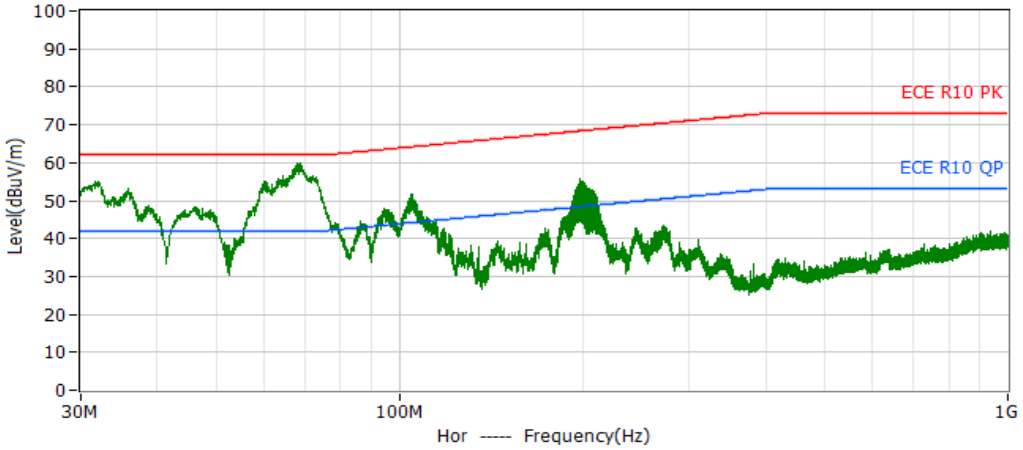

Variant 01:

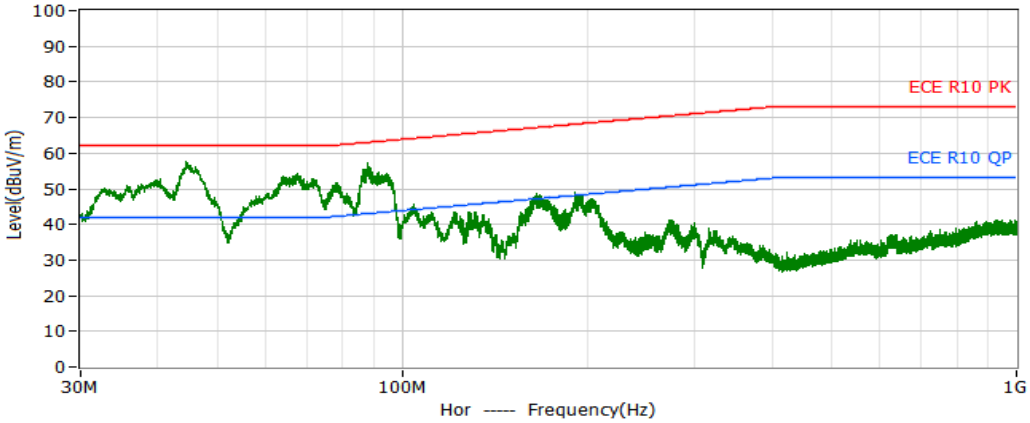

Green: Peak detector

- Vertical, lado izquierdo / *Vertical, left-hand side*

Variant 00:

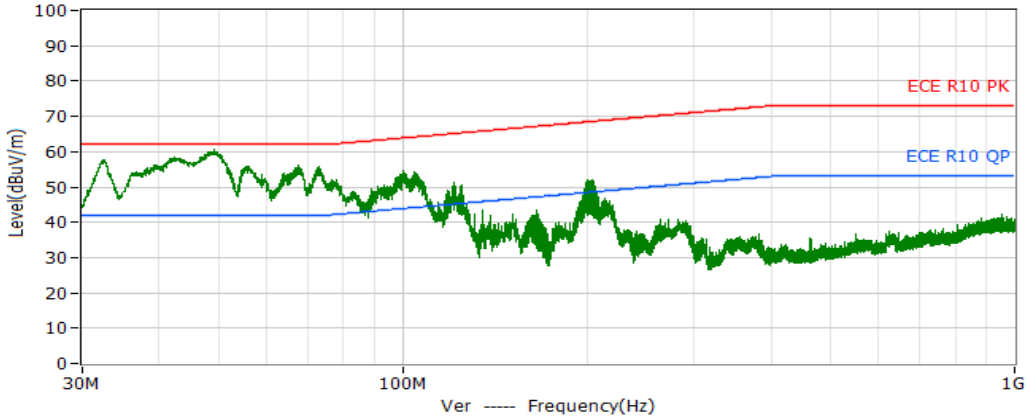

Variant 01:

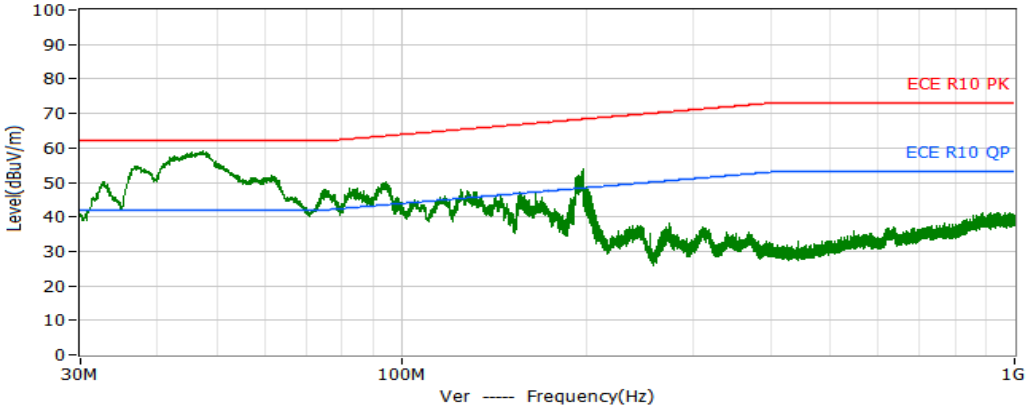

Green: Peak detector

Resultado de las disposiciones sobre la radiación de banda ancha acoplado a la red / *Results relating to broad-band radiation coupled to the power grid* ..... *CORRECT*

DISPOSICIONES SOBRE LOS ARMÓNICOS EN LAS LINEAS DE ALIMENTACIÓN DE A.C. / *REQUIREMENT RELATING TO HARMONICS ON AC POWER LINES FROM VEHICLES.*

Configuración del ensayo / *Configuration of test*:

De acuerdo con los requisitos prescritos en el Anexo 11 del Reglamento 10.06 CEPE / *According to requirements prescribed in the Annex 11 of Regulation 10.06 ECE*

- Resultados del ensayo / *Test results*:

Variant 00:

2	0.003	1.080	N/A	0.006	1.620	N/A	Pass
3	0.016	2.300	0.7	0.018	3.450	0.5	Pass
4	0.002	0.430	N/A	0.004	0.645	N/A	Pass
5	0.013	1.140	1.1	0.013	1.710	0.8	Pass
6	0.001	0.300	N/A	0.002	0.450	N/A	Pass
7	0.013	0.770	1.8	0.015	1.155	1.3	Pass
8	0.001	0.230	N/A	0.002	0.345	N/A	Pass
9	0.012	0.400	3.0	0.013	0.600	2.1	Pass
10	0.001	0.184	N/A	0.001	0.276	N/A	Pass
11	0.013	0.330	3.8	0.013	0.495	2.7	Pass
12	0.001	0.153	N/A	0.002	0.230	N/A	Pass
13	0.012	0.210	5.9	0.013	0.315	4.2	Pass
14	0.001	0.131	N/A	0.002	0.197	N/A	Pass
15	0.012	0.150	7.7	0.013	0.225	5.6	Pass
16	0.001	0.115	N/A	0.002	0.173	N/A	Pass
17	0.012	0.132	8.9	0.012	0.198	6.2	Pass
18	0.001	0.102	N/A	0.002	0.153	N/A	Pass
19	0.012	0.118	9.7	0.012	0.178	6.8	Pass
20	0.001	0.092	N/A	0.002	0.138	N/A	Pass
21	0.011	0.107	10.2	0.012	0.161	7.2	Pass
22	0.001	0.084	N/A	0.001	0.125	N/A	Pass
23	0.011	0.098	11.1	0.011	0.147	7.8	Pass
24	0.001	0.077	N/A	0.001	0.115	N/A	Pass
25	0.010	0.090	11.5	0.011	0.135	8.1	Pass
26	0.001	0.071	N/A	0.002	0.107	N/A	Pass
27	0.010	0.083	11.8	0.010	0.125	8.3	Pass
28	0.002	0.066	N/A	0.002	0.099	N/A	Pass
29	0.010	0.078	12.6	0.011	0.116	9.2	Pass
30	0.001	0.061	N/A	0.002	0.092	N/A	Pass
31	0.009	0.073	12.5	0.010	0.109	9.2	Pass
32	0.002	0.058	N/A	0.002	0.086	N/A	Pass
33	0.009	0.068	12.8	0.009	0.102	8.9	Pass
34	0.001	0.054	N/A	0.001	0.081	N/A	Pass
35	0.008	0.064	13.2	0.009	0.096	9.1	Pass
36	0.001	0.051	N/A	0.001	0.077	N/A	Pass
37	0.008	0.061	12.8	0.008	0.091	9.0	Pass
38	0.001	0.048	N/A	0.001	0.073	N/A	Pass
39	0.008	0.058	13.1	0.008	0.087	9.2	Pass
40	0.001	0.046	N/A	0.001	0.069	N/A	Pass

Variant 01:

2	0.003	1.080	N/A	0.006	1.620	N/A	Pass
3	0.678	2.300	29.5	0.815	3.450	23.6	Pass
4	0.003	0.430	N/A	0.008	0.645	N/A	Pass
5	0.399	1.140	35.0	0.599	1.710	35.0	Pass
6	0.003	0.300	N/A	0.008	0.450	N/A	Pass
7	0.369	0.770	47.9	0.450	1.155	39.0	Pass
8	0.003	0.230	N/A	0.008	0.345	N/A	Pass
9	0.218	0.400	54.5	0.288	0.600	48.0	Pass
10	0.003	0.184	N/A	0.005	0.276	N/A	Pass
11	0.195	0.330	59.1	0.266	0.495	53.7	Pass
12	0.003	0.153	N/A	0.007	0.230	N/A	Pass
13	0.145	0.210	69.0	0.188	0.315	59.7	Pass
14	0.003	0.131	N/A	0.008	0.197	N/A	Pass
15	0.110	0.150	73.3	0.154	0.225	68.4	Pass
16	0.003	0.115	N/A	0.008	0.173	N/A	Pass
17	0.109	0.132	82.6	0.139	0.198	70.2	Pass
18	0.003	0.102	N/A	0.009	0.153	N/A	Pass
19	0.095	0.118	80.5	0.128	0.178	71.9	Pass
20	0.003	0.092	N/A	0.009	0.138	N/A	Pass
21	0.084	0.107	78.5	0.108	0.161	67.1	Pass
22	0.003	0.084	N/A	0.006	0.125	N/A	Pass
23	0.074	0.098	75.5	0.097	0.147	66.0	Pass
24	0.003	0.077	N/A	0.006	0.115	N/A	Pass
25	0.062	0.090	68.9	0.089	0.135	65.9	Pass
26	0.003	0.071	N/A	0.006	0.107	N/A	Pass
27	0.055	0.083	66.3	0.078	0.125	62.4	Pass
28	0.003	0.066	N/A	0.006	0.099	N/A	Pass
29	0.045	0.078	57.7	0.069	0.116	59.5	Pass
30	0.003	0.061	N/A	0.006	0.092	N/A	Pass
31	0.035	0.073	47.9	0.058	0.109	53.2	Pass
32	0.003	0.058	N/A	0.005	0.086	N/A	Pass
33	0.028	0.068	41.2	0.049	0.102	48.0	Pass
34	0.003	0.054	N/A	0.005	0.081	N/A	Pass
35	0.024	0.064	37.5	0.040	0.096	41.7	Pass
36	0.003	0.051	N/A	0.005	0.077	N/A	Pass
37	0.020	0.061	32.8	0.035	0.091	38.5	Pass
38	0.003	0.048	N/A	0.005	0.073	N/A	Pass
39	0.018	0.058	31.0	0.031	0.087	35.6	Pass
40	0.002	0.046	N/A	0.005	0.069	N/A	Pass

Resultado de las disposiciones sobre los armónicos en líneas de alimentación AC / *Results relating to harmonics on AC power lines* .....*CORRECT*

DISPOSICIONES SOBRE LA EMISIÓN DE VARIACIÓN DE TENSIÓN, FLUCTUACIONES DE TENSIÓN Y FLICKER EN LINEAS DE AC / *REQUIREMENTS RELATING TO EMISSION OF VOLTAGE CHANGES, VOLTAGE FLUCTUATION AND FLICKER ON AC POWER LINES*

Configuración del ensayo / *Configuration of test:*

De acuerdo a los requisitos prescritos en el Anexo 12 del Reglamento 10.06 CEPE / *According to requirements prescribed in the Annex 12 of Regulation 10.06 ECE*

- Resultados del ensayo / *Test results*

Variant 00:

	Valor máximo medido / *Max measured value*	Límite / *Limit*
Flicker de corta duración / *Short duration flicker*	0,157	1
Flicker de larga duración / *Long duration flicker*	0,069	0,65

Variant 01:

	Valor máximo medido / *Max measured value*	Límite / *Limit*
Flicker de corta duración / *Short duration flicker*	0,301	1
Flicker de larga duración / *Long duration flicker*	0,131	0,65

Resultado de las disposiciones sobre la emisión de variación de tensión, fluctuaciones de tensión y flicker en líneas de alimentación AC / *Results relating to emission of voltaje changes, voltaje fluctuation and flicker on AC power lines* .....*NOT APPLICABLE*

DISPOSICIONES SOBRE LA EMISIÓN DE PERTURBACIONES CONDUCIDAS DE RADIOFRECUENCIA GENERADAS EN LINEAS AC O DC / *REQUIREMENTS RELATING TO EMISSION OF RADIOFREQUENCY CONDUCTED DISTURBANCES ON AC OR DC POWER LINES*

Configuración del ensayo / *Configuration of test:*

De acuerdo a los requisitos prescritos en el Anexo 13 del Reglamento 10.06 CEPE / *According to requirements prescribed in the Annex 13 of Regulation 10.06 ECE*

Distancia del cable de carga / *Charging cable* : 0.8 m

Tipo de detector / *Detector type* : Pico / *Peak*

- Resultados del ensayo / *Test results*

- Líneas de AC / *AC lines*:

Variant 00:

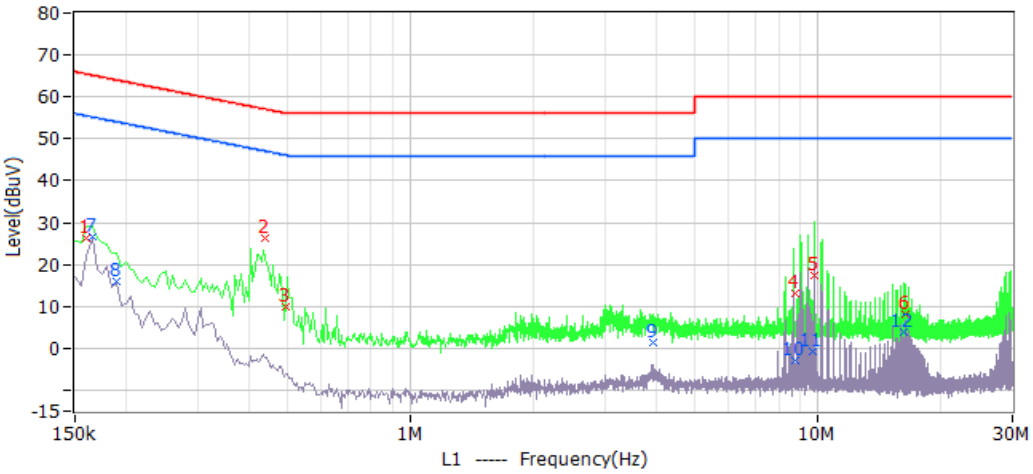

Variant 01:

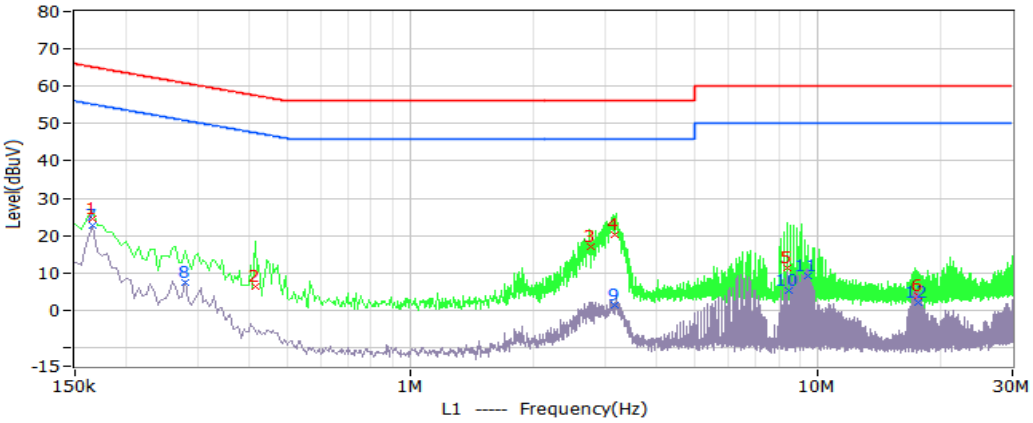

Green: Quasi peak; Gray: Average

- Líneas de DC / *DC lines*:

Variant 00:

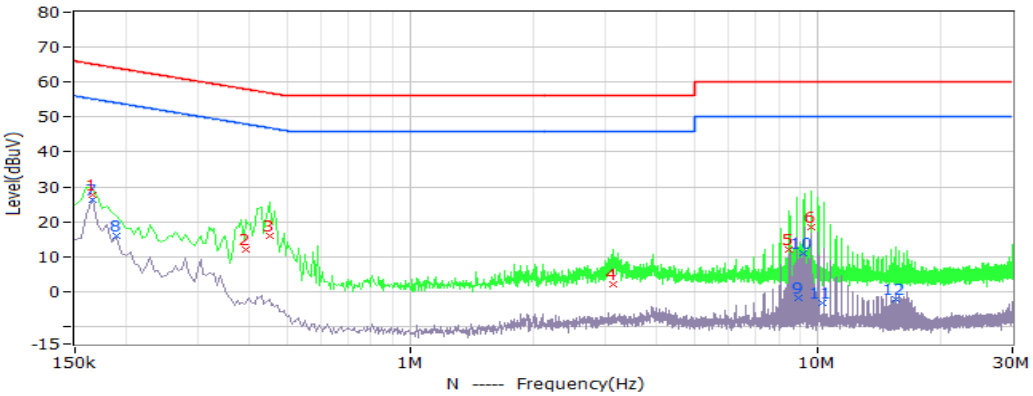

Variant 01:

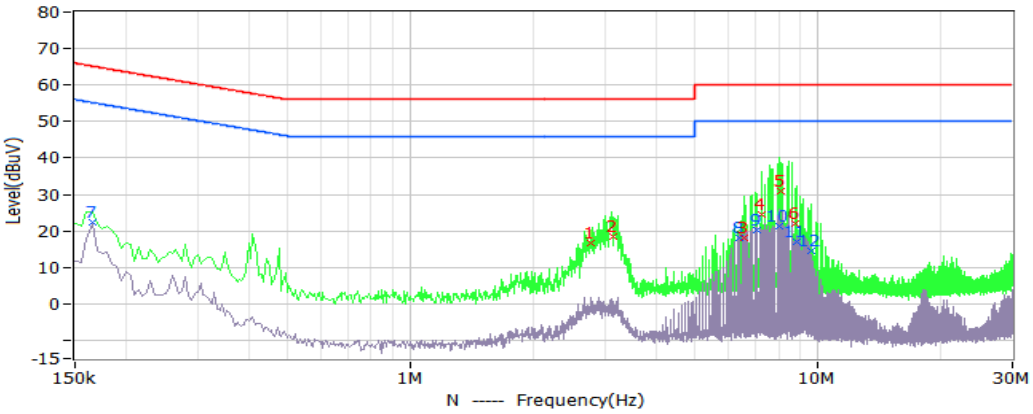

Green: Quasi peak; Gray: Average

Resultado de las disposiciones sobre la emisión de perturbaciones conducidas de radiofrecuencia generadas por el vehículo en líneas de alimentación AC o DC / *Results relating to emission radiofrequency conducted disturbances on AC or DC power lines* .....*CORRECT*

IMMUNIDAD A LA RADIACIÓN ELECTROMAGNÉTICA /
IMMUNITY TO ELECTROMAGNETIC RADIATION

Configuración del ensayo / *Configuration of test:*

De acuerdo a los requisitos prescritos en el Anexo 6 del Reglamento 10.06 CEPE /
According to requirements prescribed in the Annex 6 of Regulation 10.06 ECE

Intensidad de campo soportada por el vehículo /*Maximum field strength level* : 30 V/m

- Resultados del ensayo / *Test results*

- Funcionamiento vehículo / *Vehicle functioning*

Resultado de las disposiciones sobre la inmunidad a la radiación electromagnética / *Results relating to the immunity to electromagnetic radiation* .....*CORRECT*

IMMUNIDAD DE LOS VEHICULOS A LOS TRANSITORIOS ELECTRICOS RAPIDOS EN RAFAGAS CONDUCIDOS EN LAS LINEAS DE ALIMENTACION DE DC / *IMMUNITY OF VEHICLES TO ELECTRICAL FAST TRANSIENT/BURST DISTURBANCES CONDUCTED ALONG DC POWER LINES*

Configuración del ensayo / *Configuration of test:*

De acuerdo a los requisitos prescritos en el Anexo 15 del Reglamento 10.06 CEPE /
According to requirements prescribed in the Annex 15 of Regulation 10.06 ECE

- Resultados del ensayo / *Test results*

- Funcionamiento vehículo / *Vehicle functioning*

Resultado de las disposiciones sobre la inmunidad a los transitorios eléctricos rápidos en ráfagas conducidos en las líneas de alimentación de DC la radiación electromagnética / *Results relating to the immunity electricay fast transient/burst disturbances conducted along DC power lines* .....*CORRECT*

IMMUNIDAD DE LOS VEHICULOS A LAS ONDAS DE CHOQUE CONDUCIDAS EN LAS LÍNEAS DE ALIMENTACIÓN DE DC / *IMMUNITY OF VEHICLES TO SURGE CONDUCTED ALONG DC POWER LINES*

Configuración del ensayo / *Configuration of test:*

De acuerdo a los requisitos prescritos en el Anexo 16 del Reglamento 10.06 CEPE / *According to requirements prescribed in the Annex 16 of Regulation 10.06 ECE*

- Resultados del ensayo / *Test results*

- Funcionamiento vehículo / *Vehicle functioning*

Resultado de las disposiciones sobre la inmunidad a las ondas de choque conducidas en las líneas de alimentación de DC / *Results relating to the immunity of vehicles to surge conducted along DC power lines* ..... *CORRECT*

Lugar del ensayo / *Test place* : CVTRI, Chongqing (China)
Fecha del ensayo / *Test date* : 26~27.08, 2024 y / *and* 01~02.11, 2024

Anpeng(apple) Li
INGENIERO DE HOMOLOGACIONES
HOMOLOGATION ENGINEER

APÉNDICE / *APPENDIX* TEV/44/2014/VIII

REQUISTOS APLICABLES A LOS SALIENTES EXTERIORES /
REQUIREMENTS APPLYING TO EXTERNAL PROJECTIONS

Reglamento Delegado (UE) / *Delegated Regulation (EU)* No. 44/2014/VIII*2018/295

IDENTIFICACIÓN DEL VEHÍCULO PRESENTADO AL ENSAYO /
IDENTIFICATION OF THE VEHICLE SUBMITTED FOR TEST

Marca / *Make* (1)	:	JINMA
Tipo / *Type* (1)	:	TEV
Variantes/versiones ensayadas / *Tested variants/versions* (1)	:	00/00, 00/01, 00/02
Variantes/versiones cubiertas / *Covered variants/versions*	:	00/00, 00/01, 00/02, 01/00, 01/01, 01/02
Categoría, subcategoría y sub-subcategoría / *Category, subcategory and sub-subcategory*	:	L7e-CU
Nº de bastidor / *Frame number*	:	R3W8AZKY3RA000002
Fecha de recepción de la muestra / *Date sample received*	:	10.08.2024

Observación / *Remark*: Vehículo ensayado según Reglamento CEPE Nº 26 para cubrir los requisitos del Reglamento (UE) Nº 3/2014 Anexo VI / *Vehicle tested according to Regulation UNECE No 26 to cover the requirements of Regulation (EU) No 3/2014 Annex VI*

(1) Información proporcionada por el cliente. El laboratorio no se hace responsable de dicha información /
Information provided by the client. The laboratory is not responsible for such information

REQUISITOS GENERALES / *GENERAL REQUIREMENTS*

Superficie exterior del vehículo libre de piezas peligrosas /
The external surface of the vehicle has not any dangerous part.....*CORRECT*

REQUISITOS PARTICULARES / *SPECIFIC REQUIREMENTS*

Elementos decorativos / *Ornamental motifs*

Los elementos que sobresalen / *The elements projecting by*:

- Más de 10 mm: se apartan, desprenden o doblan al aplicar 10 daN /
  More than 10 mm: retract, detach or fold back under a force of 10 daN .....*NOT APPLICABLE*
- Más de 5 mm: ningún radio de curvatura (r_c) inferior a 2,5 mm /
  More than 5 mm: any radius of curvature (r_c) of less than 2,5 mm .....*NOT APPLICABLE*
- Menos de 5 mm: ángulos orientados hacia exterior redondeados /
  Less than 5 mm: spherical edges pointing to the outside.....*CORRECT*

Faros / *Headlamp*

Los cercos no sobresalen más de 30 mm y siempre $r_c > 2,5$ mm /
Peaks do not project by more than 30 mm and always with $r_c > 2,5$ mm .....*NOT APPLICABLE*

Faros ocultables / *Pop-up headlamps*:

En posición de funcionamiento / *operating position* .....*NOT APPLICABLE*

En posición oculta / *concealed position* .....*NOT APPLICABLE*

Faros empotrados / *Built-in headlamps*:

Cumplen con los requisitos de los paneles de la carrocería /
Comply with body-panels requirements .....*CORRECT*

Rejillas e intervalos entre elementos / *Grills*

Las piezas han de tener r_c mínimos según d *(d ≡ dist. entre dos elementos consecutivos fijos o móviles)* /
Grill components have minimum r_c in function of d (d ≡ distance between consecutive components):

d > 40 mm ⇒ rc ≥ 2.5 mm .....*NOT APPLICABLE*

25 mm < d < 40 mm ⇒ rc ≥ 1 mm .....*NOT APPLICABLE*

d < 25 mm ⇒ rc ≥ 0.5 mm .....*NOT APPLICABLE*

Unión rejilla-carrocería redondeada / *Spherical grill-chassis joint* .....*NOT APPLICABLE*

Limpiaparabrisas / *Windscreen wipe system*

Brazo de soporte de la escobilla recubierto con elemento protector /
The wiper-blade spindle is covered with a protector .....*CORRECT*

Superficie mínima del elemento protector ≥ 150 mm² /
Minimum area of the protector ≥ 150 mm² .....*CORRECT*

Escobilla y elementos de soporte sin partes afiladas /
Windscreen wiper without sharp elements .....*CORRECT*

Parachoques / *Bumpers*

Extremos laterales parachoques delanteros doblados hacia la superficie exterior / *The extremities of front bumpers are turned down towards the external surface of the bodyblock* .....*CORRECT*

Piezas orientadas hacia el exterior con $r_c \geq 5$ mm /
Rigid surfaces pointing to the outside have $r_c \geq 5$ mm .....*CORRECT*

Empuñaduras, bisagras y pomos de las puertas, portamaletas y trampillas; bocas de llenado y tapones del depósito / *Handles, hinges and push buttons for doors, bootlids and bonnets, access shutters and flaps and grab handles*

No sobresalen más de / *Do not protrude by more than*:

Empuñaduras de las puertas laterales / *handles of side doors*: 40 mm .....*CORRECT*

Otros / *any other cases*: 30 mm .....*CORRECT*

Empuñaduras de las puertas laterales de tipo giratorio /
The handles for the side doors are of the rotary type .....*NOT APPLICABLE*

Tuercas de ruedas, tapacubos y embellecedores / *Wheel nuts, hubcaps and protective devices*

No tienen salientes en forma de aleta / *Not incorporate any projections in the form of fins* .....*CORRECT*

Salientes de ruedas: no hay o no sobresalen más de 30 mm de la proyección vertical de la carrocería y con un r_c superficial ≥ 30 mm / *The protectors covering wheel nuts and hubs: there are not or they have r_c of curvature ≥ 30 mm and the projecting part in no case exceeds 30 mm* .....*CORRECT*

Aristas de chapa / *Sheet metal edges*

Bordes redondeados con un r_c ≥ 2.5 mm o recubiertas con elemento protector o material con una dureza inferior a 60 Shore A / *Spherical edges with r_c ≥ 2.5 mm or covered with a protector or with a material having a hardness of not more than 60 Shore (A)*.....*NOT APPLICABLE*

Paneles de la carrocería / *Bodyblock panelling*

Radio de curvatura de los pliegues de los paneles / *Radius of curvature of the panelling folds* .....*CORRECT*

Deflectores laterales de aire y lluvia / *Side air and rain deflectors*

Aristas orientadas hacia el exterior con r_c ≥ 1 mm / *Edges which point outwards have a r_c of at least 1 mm*.....*NOT APPLICABLE*

Puntos de apoyo para el gato / *Jacking points*

No sobresalen más de 10 mm respecto a la proyección vertical de la línea de tierra que pasa directamente por encima de ellos / *Not protude by more than 10 mm beyond the vertical projection of the floor line which is directly above of them*.....*NOT APPLICABLE*

Tubos de escape / Exhaust pipes

Tubos de escape que proyecten más de 10 mm tienen un r_c ≥ 2.5 mm / *Exhaust pipe projecting more than 10 mm has a* r_c ≥ 2.5 mm .....*NOT APPLICABLE*

Ventanas que giran hacia el exterior mas allá de la superficie exterior del vehículo / *Windows which move outwards from the vehicle's external surface*

Ninguna arista está orientada hacia delante / *No exposed edge faces forwards* .....*NOT APPLICABLE*

Ninguna parte de la ventana sobresale más allá del límite más exterior del vehículo / *No part of the window projects beyond the extreme outer edge of the vehicle*.....*NOT APPLICABLE*

Soportes de placa de matrícula / *Registration plate brackets*

Cumplen con los requisitos generales en el caso de que una esfera de 100 mm de diametro entre en contacto con ellos / *Comply with the general requirements if they are contactable by a 100 mm diameter sphere*.....*CORRECT*

Lugar del ensayo / *Test place* : CVTRI, Chongqing (China)
Fecha del ensayo / *Test date* : 17.10.2024

Anpeng(apple) Li
INGENIERO DE HOMOLOGACIONES
HOMOLOGATION ENGINEER

APÉNDICE / *APPENDIX* TEV/44/2014/X

REQUISITOS APLICABLES A LAS PLATAFORMAS DE CARGA /
REQUIREMENTS APPLYING TO LOAD PLATFORMS

Reglamento Delegado (UE) / *Delegated Regulation (EU)* No 44/2014/X*2018/295

IDENTIFICACIÓN DEL VEHÍCULO PRESENTADO AL ENSAYO /
IDENTIFICATION OF THE VEHICLE SUBMITTED FOR TEST

Marca / *Make* (1)	:	JINMA
Tipo / *Type* (1)	:	TEV
Variante/versiones ensayadas / *Tested variant/versions* (1)	:	00/00, 00/01, 00/02
Variantes/versiones cubiertas / *Covered variants/versions*	:	00/00, 00/01, 00/02, 01/00, 01/01, 01/02
Categoría, subcategoría y sub-subcategoría / *Category, subcategory and sub-subcategory*	:	L7e-CU
Nº de bastidor / *Frame number*	:	R3W8AZKY3RA000002
Fecha de recepción de la muestra / *Date sample received*	:	10.08.2024

(1) Información proporcionada por el cliente. El laboratorio no se hace responsable de dicha información /
Information provided by the client. The laboratory is not responsible for such information

REQUISITOS / *REQUIREMENTS*

Centro de gravedad del vehiculo cargado y sin conductor situado entre los ejes /
Vehicle's gravity center situated between the axles when loaded and without driver .....*CORRECT*

La longitud de la base de carga no supera en 1,4 veces la via mas ancha /
The loading bed length doesn't exceed in 1,4 times the largest wheel track .....*NOT APPLICABLE*
Observación / *Remark*: No aplicable a L6e-BU y L7e-CU / *Not applicable to L6e-BU and L7e-CU*

La anchura de la base de carga no excede la del vehículo sin plataforma /
The loading bed width does not exceed the vehicle width without platform .....*CORRECT*

Protecciones laterales adecuadas previniendo la caída de la carga /
Adequate side protections preventing load from falling off.....*CORRECT*

La plataforma es simétrica al plano longitudinal medio /
Platform symmetrical in relation to the longitudinal median plane .....*CORRECT*

Altura de la plataforma / *Height of load platform*:
Version 00: 765 mm, Version 01: 770 mm, Version 02: 780 mm ≤ 1000 mm .....*CORRECT*

Plataforma de carga unida al vehículo / *Load platform attached to the vehicle* .....*CORRECT*

Puntos de fijación para la carga / *Fixing points for the load* .....*CORRECT*

Lugar del ensayo / *Test place* : CVTRI, Chongqing (China)
Fecha del ensayo / *Test date* : 16.10.2024

Anpeng(apple) Li
INGENIERO DE HOMOLOGACIONES
HOMOLOGATION ENGINEER

APÉNDICE / *APPENDIX* TEV/44/2014/XI

REQUISITOS APLICABLES A MASAS Y DIMENSIONES /
REQUIREMENTS APPLYING TO MASSES AND DIMENSIONS

Reglamento Delegado (UE) / *Delegated Regulation (EU)* No. 44/2014/XI*2018/295

IDENTIFICACIÓN DEL VEHÍCULO PRESENTADO AL ENSAYO /
IDENTIFICATION OF THE VEHICLE SUBMITTED FOR TEST

Marca / *Make* [1]	:	JINMA
Tipo / *Type* [1]	:	TEV
Variante/Versión ensayada / *Tested variant/version* [1]	:	00/00, 00/01, 00/02, 01/00, 01/01, 01/02
Variantes/versiones cubiertas / *Covered variants/versions*	:	00/00, 00/01, 00/02, 01/00, 01/01, 01/02
Categoría, subcategoría y sub-subcategoría / *Category, subcategory and sub-subcategory*	:	L7e-CU
Nº de bastidor / *Frame number*	:	Variant 00: R3W8AZKY3RA000002 Variant 01: R3W8AZKX4RA000002
Fecha de recepción de la muestra / *Date sample received*	:	10.08.2024

[1] Información proporcionada por el cliente. El laboratorio no se hace responsable de dicha información /
Information provided by the client. The laboratory is not responsible for such information

MASAS / *MASSES*

Masa en orden de marcha / *Mass in running order* (MRO)	:	595 kg
Masa del equipo opcional / *Optional equipment mass* (OEM)	:	--- kg ≤ 10% of MRO (Versión/*Version* 00) 59 kg ≤ 10% of MRO (Versións/*Versions* 01, 02) for ~~L2e, L3e-AE/T, L5e, L6e~~, L7e
Masa de las baterías de propulsión / *Propulsion batteries mass*	:	210 kg (Variante/*Variant* 00) 165 kg (Variante/*Variant* 01)
Masa real / *Actual mass* (AM)	:	Variante/*Variant* 00: 880 kg (Versión/*Version* 00) 939 kg (Versións/*Versions* 01, 02) Variante/*Variant* 01: 835 kg (Versión/*Version* 00) 894 kg (Versións/*Versions* 01, 02)
Masa máxima técnicamente admissible / *Technically permissible maximum mass* (TPMM)	:	1604 kg

Masa máxima sobre ejes técnicamente admisible / *Technically permissible maximum mass on the axles* (TPMMA)	Eje delantero / *Front axle*	:	Variante/*Variant* 00: 730 kg (Versión/*Version* 00) 743 kg (Versión/*Version* 01) 753 kg (Versión/*Version* 02) Variante/*Variant* 01: 823 kg (Versión/*Version* 00) 796 kg (Versión/*Version* 01) 810 kg (Versión/*Version* 02)
	Eje trasero / *Rear axle*	:	Variante/*Variant* 00: 874 kg (Versión/*Version* 00) 861 kg (Versión/*Version* 01) 851 kg (Versión/*Version* 02) Variante/*Variant* 01: 781 kg (Versión/*Version* 00) 808 kg (Versión/*Version* 01) 794 kg (Versión/*Version* 02)
Masa máxima remolcable técnicamente admisible / *Technically permisible maximum towable mass*		:	--- kg
Masa máxima técnicamente admisible en el punto de acoplamiento / *Technically maximum permisible mass on the coupling point* (TMMCP)		:	--- kg
Masa de la superestructura / *Mass of the superstructure*		:	--- kg
Máxima masa útil admisible / *Maximum permisible pay-mass*		:	Variante/*Variant* 00: 724 kg (Versión/*Version* 00) 665 kg (Versións/*Versions* 01, 02) Variante/*Variant* 01: 769 kg (Versión/*Version* 00) 710 kg (Versións/*Versions* 01, 02)

<u>REQUISITOS ESPECIFICOS DE LAS MASAS DEL VEHICULO/</u>
<u>*SPECIFIC REQUIREMENTS REGARDING VEHICLE MASSES*</u>

La suma de las masas máximas técnicamente admisibles de ambos ejes no es inferior a la masa máxima técnicamente admisible del vehículo / *The sum of both axles' technically permissible maximum mass is not lower than the technically permissible maximum mass of the vehicle* .....*CORRECT*

Version 00:

La masa del equipamiento opcional no supera el 10% del límite de masa en orden de marcha para la categoría de vehículo / *The optional equipment mass is not higher than 10 % of the mass in running order limit for the vehicle category* .....*NOT APPLICABLE*

Versions (01, 02):

La masa del equipamiento opcional no supera el 10% del límite de masa en orden de marcha para la categoría de vehículo / *The optional equipment mass is not higher than 10 % of the mass in running order limit for the vehicle category* ..... *CORRECT*

La masa máxima en carga técnicamente admisible del vehículo no es inferior a la masa real / *The technically permissible maximum mass of the vehicle is not lower than the actual mass* ..... *CORRECT*

Si el vehículo se carga a su masa máxima técnicamente admisible, la masa sobre cada eje no es superior a la masa máxima técnicamente admisible de dicho eje / *If the vehicle is laden to its technically permissible maximum mass, the mass on each axle does not exceed that axle's technically permissible maximum mass* ..... *CORRECT*

Si el vehículo se carga a su masa máxima técnicamente admisible, la masa sobre el eje delantero es ≥ 30 % de la masa máxima técnicamente admisible del vehículo / *If the vehicle is laden to its technically permissible maximum mass, the mass on the front axle is ≥ 30 % of the vehicle's technically permissible maximum mass* ..... *CORRECT*

Si el vehículo se carga a su masa máxima técnicamente admisible más la masa máxima técnicamente admisible en el punto de acoplamiento, la masa sobre el eje delantero es ≥ 20 % de la masa máxima técnicamente admisible del vehículo / *If the vehicle is laden to its technically permissible maximum mass plus the technically permissible maximum mass at the coupling point, the mass on the front axle is ≥ 20 % of the vehicle's technically permissible maximum mass* ..... *NOT APPLICABLE*

Se cumplen los requisitos aplicables a vehículos con asientos extraíbles / *Applicable requirements to vehicles with removable seats are met* ..... *NOT APPLICABLE*

Se cumplen los requisitos aplicables a la masa útil máxima admisible / *Applicable requirements to the maximum permissible pay-mass are met* ..... *CORRECT*

DIMENSIONES / *DIMENSIONS*

Longitud / *Length*	=	--- (---)	≤	3000 mm (L6e-B)	*NOT APPLICABLE*
		3690 (3690)	≤	3700 mm (L7e-C)	*CORRECT*
		--- (---)	≤	4000 mm (Otros/ *Other*)	*NOT APPLICABLE*
Anchura / *Width*	=	--- (---)	≤	1000 mm (L1e)	*NOT APPLICABLE*
		1400 (1400)	≤	1500 mm (L6e-B / L7e-C)	*CORRECT*
		--- (---)	≤	2000 mm (Otros/*Other*)	*NOT APPLICABLE*
Altura / *Height*	=	Versións/*Versions* 00, 01: 1910 (1910)			
		Versión/*Version* 02: 2080 (2080)	≤	2500 mm	*CORRECT*
Distancia entre ejes / *Wheelbase*	=	1815 (1815)			*CORRECT*

Ancho de via / *Track-width*					
Delantero / *Front*	=	1125	(1125)		....*CORRECT*
Trasero / *Rear*	=	1170	(1170)		....*CORRECT*
Altura del asiento / *Seat height*	=	---	(---)	≥ 900 mm (L3e-AE)	....*NOT APPLICABLE*
		---	(---)	≥ 700 mm (L3e-AT)	....*NOT APPLICABLE*
Altura libre desde el suelo / *Ground clearance*	=	---	(---)	≥ 310 mm (L3e-AE)	....*NOT APPLICABLE*
		---	(---)	≥ 280 mm (L3e-AT)	....*NOT APPLICABLE*
		---	(---)	≥ 180 mm (L7e-B)	....*NOT APPLICABLE*
Distancia entre centros de contacto con el suelo para ruedas gemelas / *Distance between the centres of the wheel ground contact areas for twinned wheels*	=	---	(---)	≤ 460 mm	....*NOT APPLICABLE*

Observaciones / *Remarks*: Los valores entre paréntesis corresponden a los declarados por el fabricante / *Values between parentheses are declared by the manufacturer*

Las dimensiones reales no difieren en más de un 3 % de las declaradas por el fabricante / *The actual dimensions do not differ by more than 3 % from those declared by the manufacturer*....*CORRECT*

Lugar del ensayo / *Test place* : CVTRI, Chongqing (China)
Fecha del ensayo / *Test date* : 16.10.2024

Anpeng(apple) Li
INGENIERO DE HOMOLOGACIONES
HOMOLOGATION ENGINEER

APÉNDICE / *APPENDIX* TEV/44/2014/XII

REQUISITOS APLICABLES A LOS DIAGNÓSTICOS A BORDO (OBD) FUNCIONALES / *REQUIREMENTS APPLYING TO FUNCTIONAL ON-BOARD DIAGNOSTICS (OBD)*

Reglamento Delegado (UE) / *Delegated Regulation (EU)* No. 44/2014/XII*2018/295

IDENTIFICACIÓN DEL VEHÍCULO PRESENTADO AL ENSAYO / *IDENTIFICATION OF THE VEHICLE SUBMITTED FOR TEST*

Marca / *Make* (1)	:	JINMA
Tipo / *Type* (1)	:	TEV
Variantes/Versións / *Variants/Versions* (1)	:	00/00, 00/01, 00/02, 01/00, 01/01, 01/02
Categoría, subcategoría y sub-subcategoría / *Category, subcategory and sub-subcategory*	:	L7e-CU
Nº de bastidor / *Frame number*	:	R3W8AZKY3RA000002
Fase OBD / *OBD Stage*	:	Fase I / *Stage I*
Fecha de recepción de la muestra / *Date sample received*	:	10.08.2024

(1) Información proporcionada por el cliente. El laboratorio no se hace responsable de dicha información / *Information provided by the client. The laboratory is not responsible for such information*

REQUISITOS FUNCIONALES DEL OBD / *FUNCTIONAL OBD REQUIREMENTS*

Requisitos conformes al Anexo XII, parágrafo 3.1 /
Requirements according to Annex XII, paragraph 3.1 .....*CORRECT*

Requisitos conformes al Anexo XII, parágrafo 3.2 /
Requirements according to Annex XII, paragraph 3.2.....*CORRECT OBD STAGE I*

Requisitos conformes al Anexo XII, parágrafo 3.3 /
Requirements according to Annex XII, paragraph 3.3.....*CORRECT OBD STAGE I*

Requisitos conformes al Anexo XII, parágrafo 3.4 /
Requirements according to Annex XII, paragraph 3.4 .....*CORRECT*

Requisitos conformes al Anexo XII, parágrafo 3.5 /
Requirements according to Annex XII, paragraph 3.5.....*CORRECT OBD STAGE I*

Requisitos conformes al Anexo XII, parágrafo 3.6 /
Requirements according to Annex XII, paragraph 3.6.....*CORRECT OBD STAGE I*

Requisitos conformes al Anexo XII, parágrafo 3.7 /
Requirements according to Annex XII, paragraph 3.7 .....*CORRECT*

Requisitos conformes al Anexo XII, parágrafo 3.8 /
Requirements according to Annex XII, paragraph 3.8 .....*CORRECT*

Requisitos conformes al Anexo XII, parágrafo 3.9 /
Requirements according to Annex XII, paragraph 3.9 .....*NOT APPLICABLE*

ASPECTOS FUNCIONALES DE LOS SISTEMAS DE DIAGNÓSTICO A BORDO (OBD) – APÉNDICE 1 / *FUNCTIONAL ASPECTS OF ON-BOARD DIAGNOSTIIC (OBD) SYSTEMS – APPENDIX 1*

Los sistemas de diagnóstico a bordo instalados en vehículos de categoría L se ajustan a la información detallada, los requisitos funcionales y los procedimientos de ensayo de verificación / *The on-board diagnostic systems fitted on L-category vehicles complying with the detailed information and functional requirements and verification test procedures* ..... *CORRECT*

Ensayo de verificación funcional del diagnóstico a bordo / *On-board diagnostic functional verification testing* ..... *CORRECT*

Determinado el primer funcionamiento incorrecto de cualquier componente o sistema, se almacena en la memoria del ordenador la imagen fija de las condiciones del motor en ese momento / *Upon determinated the first malfunction of any component or system, 'freeze-frame' engine conditions present at the time is stored in computer memory* ..... *CORRECT*

Si existen, estarán también disponibles las señales detalladas en el Anexo XII, Apéndice 1, parágrafo 3.2, además de la información de imagen fija exigida / *If available, the signals detailed in Annex XII, Apendix 1, paragraph 3.2, in addition to the required freeze-frame information shall be made available* ..... *CORRECT*

El sistema de diagnóstico facilita un acceso normalizado y sin restricciones al OBD y ser conforme con las normas ISO y/o la especificación SAE que se indica en el Anexo XII, Apéndice 1, parágrafo 3.8 / *The diagnostic system provides for standardised and unrestricted access to OBD and conform with ISO standards and/or SAE specification indicated in Annex XII, Appendix 1, paragraph 3.8* ..... *CORRECT*

Norma a utilizar como enlace de las comunicaciones entre el vehículo y el exterior / *For communications link between on-board too off-board the following standard is used* ..... ISO 9141-2:1994/Amd 1:1996

Datos de diagnóstico básicos e información de control bidireccional según la norma ISO 15031-5:2011 y disponibles utilizando una herramienta de diagnóstico según la norma ISO 15031-4:2005 / *Basic diagnostic data and bi-directional control information according to ISO 15031-5:2011 and available using a diagnostic tool according to ISO 15031-4:2005* ..... *CORRECT*

Código de fallo adecuado y coherente con los del punto 6.3 de la norma ISO 15031-6:2010, o bien, utilizando los códigos de problemas de diagnóstico indicados en los puntos 5.3 y 5.6 de la norma ISO DIS 15031-6:2010 / *Appropiate fault code consistent with those in Section 6.3 of ISO 15031-6:2010 or using the diagnostic trouble codes in Sections 5.3 and 5.6 of ISO DIS 15031-6:2010* ..... *CORRECT*

Código de fallo alternativo de acuerdo con la norma ISO 14229:2006 / *Alternative fault code according to ISO 14229:2006* ..... *NOT APPLICABLE*

La interfaz de conexión entre el vehículo y el comprobador de diagnóstico está normalizada y cumple los requisitos de la norma ISO DIS 15031-3:2004 / *The connection interface between the vehicle and the diagnostic tester is standardised and meet all the requirements of ISO DIS 15031-3:2004* ..... *CORRECT*

Utiliza una interfaz de conexión alternativa / *An alternative connection interface is used* .....*YES*

Si se utiliza una interfaz de conexión alternativa, se proporciona un adaptador que permita la conexión a una herramienta de exploración genérica / *Where an alternative connection is used, has been provided an adapter enabling connection to a generic scan tool* .....*CORRECT*

Se encuentra instalada debajo de la plaza de asiento o fácilmente accesible pero protegida contra manipulación / *It is installed under the seating position or readily accessible but protected from tampering*.....*CORRECT*

La posición de la interfaz queda claramente indicada en el manual de uso / *The position of the connection interface is clearly indicated in the user manual* .....*CORRECT*

Lugar del ensayo / *Test place* : CVTRI, Chongqing (China)
Fecha del ensayo / *Test date* : 17.10.2024

Anpeng(apple) Li
INGENIERO DE HOMOLOGACIONES
HOMOLOGATION ENGINEER

APÉNDICE / *APPENDIX* TEV/44/2014/XIV

REQUISITOS APLICABLES AL ESPACIÓ DESTINADO A LA PLACA DE MATRÍCULA / *REQUIREMENTS APPLYING TO THE REGISTRATION PLATE*

Reglamento Delegado (UE) / *Delegated Regulation (EU)* No. 44/2014/XIV*2018/295

IDENTIFICACIÓN DEL VEHÍCULO PRESENTADO AL ENSAYO / *IDENTIFICATION OF THE VEHICLE SUBMITTED FOR TEST*

Marca / *Make* [(1)]	:	JINMA
Tipo / *Type* [(1)]	:	TEV
Variantes/versiones ensayadas / *Tested variants/versions* [(1)]	:	00/01
Variantes/versiones cubiertas / *Covered variants/versions*	:	00/00, 00/01, 00/02, 01/00, 01/01, 01/02
Categoría, subcategoría y sub-subcategoría / *Category, subcategory and sub-subcategory*	:	L7e-CU
Nº de bastidor / *Frame number*	:	R3W8AZKY3RA000002
Fecha de recepción de la muestra / *Date sample received*	:	10.08.2024

[(1)] Información proporcionada por el cliente. El laboratorio no se hace responsable de dicha información / *Information provided by the client. The laboratory is not responsible for such information*

DIMENSIONES / *DIMENSIONS*

Vehículos de categoría / *Vehicle categories*: L1e, L2e, L6e

Emplazamiento (anchura x altura) / *Space for mounting (width x height)*	:	100 x 175 mm.....*NOT APPLICABLE*
Emplazamiento (anchura x altura) / *Space for mounting (width x height)*	:	145 x 125 mm.....*NOT APPLICABLE*

Vehículos de categoría / *Vehicle categories*: L3e, L4e, L5e, L7e

Emplazamiento (anchura x altura) / *Space for mounting (width x height)*	:	280 x 200 mm.....*CORRECT*

COLOCACIÓN Y FIJACIÓN PARA VEHÍCULOS DE CATEGORÍA / *MOUNTING AND FIXING POSTION FOR VEHICLE CATEGORIES*: L6e, L7e

Espacio destinado a la matrícula delantera o trasera con superficie rectangular plana o prácticamente plana / *Space for mounting a front or rear registration plate comprises a flat or virtually flat rectangular surface* .....*CORRECT*

Agujeros o huecos con anchura menor o igual a 40 mm y protuberancias de no más de 5 mm / *Holes or gaps are less or equal to 40 mm wide and protrusions of no more than 5 mm* .....*CORRECT*

Inclinación / *Inclination*

Placa perpendicular al plano longitudinal medio del vehículo /
At right angles to the median longitudinal plane of the vehicle.....*CORRECT*

Superficie con orientado hacia arriba / *Upwards surface* :
Ángulo respecto a la vertical / *Angle from the vertical* :
Front: 1°, *Rear:* 4° ≤ 30°.....*CORRECT*

Superficie con orientado hacia abajo / *Downwards surface*:
Ángulo respecto a la vertical / *Angle from the vertical* : --- ≤ 15°.....*NOT APPLICABLE*

Altura / *Height*

Placa delantera - Radio de la rueda superior a 0,20 m / *Front plate - Radius of the wheel more than 0,20 m*

Altura máxima / *Maximum height* = 430 ≤ 1500 mm.....*CORRECT*

Altura mínima / *Minimum height* = 230 ≥ 200 mm.....*CORRECT*

Placa posterior - Radio de la rueda superior a 0,20 m / *Rear plate - Radius of the wheel more than 0,20 m*

Altura máxima / *Maximum height* = 490 ≤ 1500 mm.....*CORRECT*

Altura mínima / *Minimum height* = 290 ≥ 200 mm.....*CORRECT*

Visibilidad geométrica / *Geometrical visibility*

Visibilidad lateral / *Prop visibility* ≥ 30°.....*CORRECT*

Visibilidad superior / *Upward visibility* ≥ 15°.....*CORRECT*

Visibilidad inferior / *Downward visibility* ≥ 0°.....*CORRECT*

Lugar del ensayo / *Test place* : CVTRI, Chongqing (China)
Fecha del ensayo / *Test date* : 16.10.2024

Anpeng(apple) Li
INGENIERO DE HOMOLOGACIONES
HOMOLOGATION ENGINEER

APÉNDICE / *APPENDIX* TEV/44/2014/XV

REQUISITOS APLICABLES A LA INFORMACIÓN SOBRE REPARACIÓN Y MANTENIMIENTO / *REQUIREMENTS APPLYING TO ACCESS TO REPAIR AND MAINTENANCE INFORMATION*

Reglamento Delegado (UE) / *Delegated Regulation (EU)* No. 44/2014/XV*2016/1824

IDENTIFICACIÓN DEL VEHÍCULO / *IDENTIFICATION OF THE VEHICLE*

Marca / *Make* (1)	:	JINMA
Tipo / *Type* (1)	:	TEV
Variantes/Versiones / *Variants/Versions* (1)	:	00/00, 00/01, 00/02, 01/00, 01/01, 01/02
Categoría, subcategoría y sub-subcategoría / *Category, subcategory and sub-subcategory*	:	L7e-CU

(1) Información proporcionada por el cliente. El laboratorio no se hace responsable de dicha información / *Information provided by the client. The laboratory is not responsible for such information*

El fabricante aporta un certificado declarando la disponibilidad de la información necesaria para la inspección, diagnosis, mantenimiento y reparación del vehículo. Este certificado sirve como única prueba de cumplimiento con los requisitos del Capítulo XV del Reglamento (UE) Nº 168/2013 / *The manufacturer provides a certificate stating the availability of the information required for the inspection, diagnosis, servicing or repair of the vehicle. This certificate serves as the proof of compliance with Chapter XV of Regulation (EU) No 168/2013* .....*CORRECT*

Lugar del ensayo / *Test place* : Hongkong, China
Fecha del ensayo / *Test date* : 31.10.2024

Anpeng(apple) Li
INGENIERO DE HOMOLOGACIONES
HOMOLOGATION ENGINEER

APÉNDICE / *APPENDIX* TEV/901/2014/V

INSCRIPCIONES REGLAMENTARIAS / *STATUTORY INSCRIPTIONS*

Reglamento de Ejecución (UE) / *Implementing Regulation (EU)* No 901/2014/V*2020/239

IDENTIFICACIÓN DEL VEHÍCULO PRESENTADO AL ENSAYO /
IDENTIFICATION OF THE VEHICLE SUBMITTED FOR TEST

Marca / *Make* [(1)]	:	JINMA
Tipo / *Type* [(1)]	:	TEV
Categoría, subcategoría y sub-subcategoría / *Category, subcategory and sub-subcategory*	:	L7e-CU
Nº de bastidor / *Frame number*	:	R3W8AZKY3RA000002
Fecha de recepción de la muestra / *Date sample received*	:	10.08.2024

[(1)] Información proporcionada por el cliente. El laboratorio no se hace responsable de dicha información / *Information provided by the client. The laboratory is not responsible for such information*

PLACA DEL FABRICANTE / *MANUFACTURER'S DATA PLATE*

Situación y fijación / *Location and attachment* ..... *CORRECT*

Datos mínimos / *Minimum data* ..... *CORRECT*

Situación de los datos / *Data location* ..... *CORRECT*

Tipo de caracteres / *Characters type* ..... *CORRECT*

Dimensión caracteres / *Size of characters*: 4 mm ≥ 2 mm ..... *CORRECT*

NÚMERO DE IDENTIFICACIÓN DEL VEHÍCULO / *VEHICLE IDENTIFICATION NUMBER*

Situación y marcado / *Location and marking* ..... *CORRECT*

Constitución del número / *Identification number structure* ..... *CORRECT*

Disposición sobre el chasis/bastidor / *Location on chassis/frame* ..... *CORRECT*

Tipo de caracteres / *Characters type* ..... *CORRECT*

Dimensión caracteres en el chasis/bastidor / *Size of characters on chassis/frame*:
8 mm ≥ 4 mm ..... *CORRECT*

Lugar del ensayo / *Test place* : CVTRI, Chongqing (China)
Fecha del ensayo / *Test date* : 16.10.2024

Anpeng(apple) Li
INGENIERO DE HOMOLOGACIONES
HOMOLOGATION ENGINEER

DOCUMENTACIÓN TÉCNICA /
TECHNICAL DOCUMENTATION

HONG KONG RUNHORSE HOLDING CO., LIMITED

FLAT 01C3, 10/F CARNIVAL COMMERCIAL BUILDING 18 JAVA ROAD,
NORTH POINT, HONG KONG, CHINA

Information
on the type-approval procedure chosen in accordance with Article 25(1) of Regulation (EU) No 168/2013
Information folder sheet

A duly completed version of this statement shall be included in the information folder.

The undersigned	:	< Mr. Cui Meng, Legal Person >
Company name and address of the manufacturer	:	HONG KONG RUNHORSE HOLDING CO., LIMITED FLAT 01C3, 10/F CARNIVAL COMMERCIAL BUILDING 18 JAVA ROAD, NORTH POINT, HONG KONG, CHINA
Name and address of the manufacturer's representative (if any)	:	Mobit Belgium Eindeken 3, 9940 Evergem, Belgium
Hereby applies for type-approval procedure	:	(a) ~~step-by-step type-approval~~ (b) single-step type-approval (c) ~~mixed type-approval~~

Where procedures (a) or (c) are chosen, compliance with requirements as under (b) is declared for all systems, components and separate technical units.

Multi-stage type-approval chosen in accordance with Article 25(5) of Regulation (EU) No 168/2013	:	~~yes~~/no

Information on the vehicle(s) to be filled in, if application is for EU whole-vehicle type-approval:

0.1.	Make (trade name of the manufacturer)	:	JINMA, RUNHORSE
0.2.	Type	:	TEV
0.2.1.	Variant	:	00, 01
0.2.2.	Version	:	00, 01, 02
0.2.3.	Commercial name(s) (if available)	:	TEV
0.3.	Category, subcategory and sub-subcategory of vehicle	:	L7e-CU

Information to be filled in, if application is for type-approval of a system/ component/ separate technical unit:

0.7.	Make(s) (trade name(s) of manufacturer)	:	Not applicable
0.8.	Type	:	Not applicable
0.8.1.	Commercial name(s) (if available)	:	Not applicable
1.6.	Virtual and/or self-testing	:	Not applicable

1.6.1. Overview list with virtual and/or self-tested systems, components or separate technical units pursuant to point 6 of Annex III to Commission Delegated Regulation (EU) No 44/2014 below:

HONG KONG RUNHORSE HOLDING CO., LIMITED

FLAT 01C3, 10/F CARNIVAL COMMERCIAL BUILDING 18 JAVA ROAD,
NORTH POINT, HONG KONG, CHINA

Overview table virtual and/or self-testing

Delegated act	Annex	Subject	Virtual and/or self-tested: yes/no
Commission Delegated Regulation (EU) No 134/2014 (*)	X	Testing procedures on maximum design vehicle speed	Self-testing: ~~yes~~/no
Commission Delegated Regulation (EU) No 3/2014	II	Audible warning devices	Self-testing: ~~yes~~/no
Commission Delegated Regulation (EU) No 3/2014	VIII	Driver-operated controls including identification of controls, tell-tales and indicators	Self-testing: ~~yes~~/no
Commission Delegated Regulation (EU) No 3/2014	IX	Installation of lighting and light-signalling devices	Virtual testing: ~~yes~~/no
Commission Delegated Regulation (EU) No 3/2014	X	Rearward visibility	Virtual testing: ~~yes~~/no
Commission Delegated Regulation (EU) No 3/2014	XV	Installation of tyres	Virtual testing: ~~yes~~/no
Commission Delegated Regulation (EU) No 44/2014	XIV	Registration plate space	Self & Virtual testing: ~~yes~~/no
Commission Delegated Regulation (EU) No 44/2014	XVI	Stands	Self-testing: ~~yes~~/no
This Commission Implementing Regulation	V	Statutory plate and EU type-approval mark	Self-testing: ~~yes~~/no

(*) Commission Delegated Regulation (EU) No 134/2014 of 16 December 2013 supplementing Regulation (EU) No 168/2013 of the European Parliament and of the Council with regard to environmental and propulsion unit performance requirements and amending Annex V thereof (OJ L 53, 21.2.2014, p.1).

1.6.2. Detailed report on validation of virtual and/or self-testing added : ~~yes~~/no

Place : Hong Kong, China

Date : August 15, 2024

Signature :

Name and position in the company : Mr. Cui Meng, Legal Person

HONG KONG RUNHORSE HOLDING CO., LIMITED

Information document number: 168/2013-TEV-00

Application date: August 15, 2024

INFORMATION DOCUMENT CONCERNING THE APPROVAL OF A WHOLE VEHICLE TYPE

Index contents:

1) Brief technical description of vehicle configuration(s);
2) Information document;
3) List of drawings;

Annexes to information document:

1) Manufacturer's statement on endurance testing;
2) Manufacturer's statement on structure integrity;
3) Manufacturer's certificate on access to vehicle OBD(Stage I) and vehicle repair and maintenance information;
4) Manufacturer's statement on anti-tampering;
5) Statement on none "defeat device";
6) Statement on anti-theft device;
7) Statement on none asbestos material;
8) Manufacturer's statement on concerning authority of signature on certificates of conformity;
9) Template of certificate of conformity;

SUBJECT: QUADRICYCLE TYPE "TEV"

Variant(s) and version(s) matrix:

Type	Variant	Version	Load platform	Max. speed	30 minutes power	Battery	Other technical description
TEV	00	00	Basic configuration	80 km/h	14.8 kW	Lithium battery 89.6V, 230Ah	Electric motor type: TZ155XPS110B Controller type: KTZ09X40PS1048 Brake system: SSBS with ABS, front disc brake, rear disc brake.
		01	Small load platform				
		02	Big load platform				
	01	00	Basic configuration	65 km/h	7.5 kW	Lithium battery 89.6V, 150Ah	Electric motor type: TZ155MPS092 Controller type: KTZ09M45PS560 Brake system: SSBS with ABS, front disc brake, rear disc brake.
		01	Small load platform				
		02	Big load platform				

Document extension:

Extension Index	Revision	Application Date	Reasons for revision/extension
00	00	August 15, 2024	N.A.

INFORMATION DOCUMENT FOR THE PURPOSE OF EC TYPE-APPROVAL OF VEHICLES

According to Regulation (EU) number 168/2013*2024/2847
and Commission implementing Regulation (EU) number 901/2014*2020/239

Item No.	(Sub) categories	Detailed information		
0.		GENERAL INFORMATION		
A.		General information concerning vehicles		
0.1.	L1e-L7e	Make (trade name of manufacturer)	:	JINMA, RUNHORSE
0.2.	L1e-L7e	Type [17]	:	TEV
0.2.1.	L1e-L7e	Variant(s) [17]	:	00, 01
0.2.2.	L1e-L7e	Version(s) [17]	:	00, 01, 02
0.2.3.	L1e-L7e	Commercial name(s) (if available)	:	TEV
0.3.	L1e-L7e	Category, subcategory and sub-subcategory of vehicle [2]	:	L7e-CU
0.4.	L1e-L7e	Company name and address of manufacturer	:	HONG KONG RUNHORSE HOLDING CO., LIMITED FLAT 01C3, 10/F CARNIVAL COMMERCIAL BUILDING 18 JAVA ROAD, NORTH POINT, HONG KONG, CHINA
0.4.1.	L1e-L7e	Name(s) and address(es) of assembly plants	:	Qingzhou Dajinma Motorcycle Co., Ltd No.3081, Dongjing Road, Qingzhou Economic Development Zone, Weifang, Shandong Province, China
0.4.2.	L1e-L7e	Name and address of manufacturer's authorized representative, if any	:	Mobit Belgium Eindeken 3, 9940 Evergem, Belgium
0.5.	L1e-L7e	Manufacturer's statutory plate(s)		
0.5.1.	L1e-L7e	Location of the manufacturer's statutory plate [15] [18]	:	C, x -134, y 0, z 680 Refer to drawing No. TEV-01-01
0.5.2.	L1e-L7e	Method of attachment	:	By riveted
0.5.3.	L1e-L7e	Photographs and/or drawings of the statutory plate (completed example with dimensions)	:	Refer to drawing No. TEV-01-02
0.6.	L1e-L7e	Location of the vehicle identification number [15]	:	R, x 235, y 325, z 555
0.6.1.	L1e-L7e	Photographs and/or drawings of the locations of the vehicle identification number (completed example with dimensions)	:	Refer to drawing No. TEV-02-01

Item No.	(Sub) categories	Detailed information		
0.6.1.1.	L1e-L7e	The serial number of the type begins with	:	TEV/00/00, TEV/00/01, TEV/00/02: ☆R3W8AZKY??A??????☆ TEV/01/00, TEV/01/01, TEV/01/02: ☆R3W8AZKX??A??????☆ Refer to drawing No. TEV-02-02
B.		General information concerning systems, components or separate technical units		
	L1e-L7e	From 0.7. to 0.11.2.	:	Not applicable
C.		General information regarding conformity of production and access to repair and maintenance information		
0.12.		Conformity of production		
0.12.1.	L1e-L7e	Description of overall quality-assurance management systems	:	Conforms to ISO9001:2015 quality management system and EEC requirements
0.13.		Access to repair and maintenance information		
0.13.1.	L1e-L7e	Address of principal website for access to vehicle repair and maintenance information	:	https://www.runhorseev.com Information available within six months from the date of type approval. See regulation (EU) No 168/2013, Article 57, paragraph 8
0.13.2.	L1e-L7e	In the case of multi-stage type-approval, address of principal website for access to vehicle repair and maintenance information from manufacturer(s) at previous stage(s)	:	Not applicable
1.		GENERAL CONSTRUCTION CHARACTERISTICS		
1.1.	L1e-L7e	Photographs and/or drawings of a representative vehicle	:	TEV/00/00, TEV/01/00: Refer to drawing No. TEV-03-01 TEV/00/01, TEV/01/01: Refer to drawing No. TEV-03-02 TEV/00/02, TEV/01/02: Refer to drawing No. TEV-03-03
1.2.	L1e-L7e	Scale drawing of the whole vehicle	:	See item 1.1.
1.3.	L1e-L7e	Number of axles and wheels	:	2 axles / 4 wheels
1.3.1.	L1e-L7e	Axles with twinned wheels (23)	:	Not applicable
1.3.2.	L1e-L7e	Powered axles (23)	:	R (rear powered axle)
1.4.	L1e-L7e	Chassis (if any) (overall drawing)	:	Refer to drawing No. TEV-04-01

Item No.	(Sub) categories	Detailed information		
1.5.	L2e, L5e-B, L6e-B, L7e-A2, L7e-B2, L7e-C	Material used for the bodywork	:	Cold rolled steel Q235
1.6.	L1e-L7e	Position and arrangement of the propulsion(s)	:	Electric motor mounted on rear axle Refer to drawing No. TEV-05-01, TEV-05-02
1.7.	L4e, L5e-B, L6e-B, L7e-A2, L7e-B2, L7e-C	Hand of drive	:	left/right~~/centre~~ (4)
1.7.1.	L1e-L7e	Vehicle is equipped to be driven in right/ left-hand traffic and in countries that use metric/metric and imperial units (4)	:	Right-hand and left-hand traffic, metric and imperial units
1.8.		Propulsion unit performance		
1.8.1.	L3e, L4e, L5e, L7e-A,L7e-B2	Declared maximum vehicle speed	:	Not applicable
1.8.2.	L1e, L2e, L6e, L7e-B1, L7e-C	Maximum design vehicle speed (22): ….km/h and gear in which it is reached	:	TEV/00/00, TEV/00/01, TEV/00/02: 80 km/h TEV/01/00, TEV/01/01, TEV/01/02: 65 km/h and gear in which it is reached: Not applicable
1.8.3.	L1e-L7e	Maximum net power combustion engine	:	Not applicable
1.8.4.	L1e-L7e	Maximum net torque combustion engine	:	Not applicable
1.8.5.	L1e-L7e	Maximum continuous-rated power electric motor (~~15~~/30 (4) minutes power (27))	:	TEV/00/00, TEV/00/01, TEV/00/02: 14.8 kW at 5100 min^{-1} TEV/01/00, TEV/01/01, TEV/01/02: 7.5 kW at 5900 min^{-1}
1.8.6.	L1e-L7e	Maximum continuous-rated torque electric motor	:	TEV/00/00, TEV/00/01, TEV/00/02: 27.0 Nm at 5100 min^{-1} TEV/01/00, TEV/01/01, TEV/01/02: 12.1 Nm at 5900 min^{-1}
1.8.7.	L1e-L7e	Maximum continuous total power for propulsion(s)	:	Not applicable
1.8.8.	L1e-L7e	Maximum continuous total torque for propulsion(s)	:	Not applicable

Item No.	(Sub) categories	Detailed information			
1.8.9.	L1e-L7e	Maximum peak power for propulsion(s)	:	TEV/00/00	19.0 kW at 4800 min^{-1}
				TEV/00/01	
				TEV/00/02	
				TEV/01/00	10.0 kW at 5300 min^{-1}
				TEV/01/01	
				TEV/01/02	
2.		MASSES AND DIMENSIONS (in kg and mm.) refer to drawings where applicable			
2.1.		Range of vehicle mass (overall)			
2.1.1.	L1e-L7e	Mass in running order	:	595 kg	
2.1.1.1.	L1e-L7e	Distribution of mass in running order between the axles	:	TEV/00/00	Front: 404 kg Rear: 191 kg
				TEV/00/01	
				TEV/00/02	
				TEV/01/00	Front: 428 kg Rear: 167 kg
				TEV/01/01	
				TEV/01/02	
2.1.2.	L1e-L7e	Actual mass	:	TEV/00/00	880 kg
				TEV/00/01	939 kg
				TEV/00/02	
				TEV/01/00	835 kg
				TEV/01/01	894 kg
				TEV/01/02	
2.1.2.1.	L1e-L7e	Distribution of actual mass between the axles	:	TEV/00/00	Front: 575 kg, Rear: 305 kg
				TEV/00/01	Front: 578 kg, Rear: 361 kg
				TEV/00/02	Front: 569 kg, Rear: 370 kg
				TEV/01/00	Front: 558 kg, Rear: 277 kg
				TEV/01/01	Front: 588 kg, Rear: 306 kg
				TEV/01/02	Front: 578 kg, Rear: 316 kg
2.1.3.	L1e-L7e	Technically permissible maximum laden mass	:	1604 kg	
2.1.3.1.	L1e-L7e	Technically permissible maximum mass on front axle	:	TEV/00/00	730 kg
				TEV/00/01	743 kg
				TEV/00/02	753 kg
				TEV/01/00	823 kg
				TEV/01/01	796 kg
				TEV/01/02	810 kg
2.1.3.2.	L1e-L7e	Technically permissible maximum mass on rear axle	:	TEV/00/00	874 kg
				TEV/00/01	861 kg
				TEV/00/02	851 kg
				TEV/01/00	781 kg
				TEV/01/01	808 kg
				TEV/01/02	794 kg

Item No.	(Sub) categories	Detailed information		
2.1.3.3.	L4e	Technically permissible maximum mass on sidecar axle	:	Not applicable
2.1.4.	L1e-L7e	Maximum hill-starting ability at the maximum technically permissible mass declared by the manufacturer	:	25% slope
2.1.5.	L1e-L7e	Maximum pay mass declared by manufacturer	:	TEV/00/00: 724 kg TEV/00/01, TEV/00/02: 665 kg TEV/01/00: 769 kg TEV/01/01, TEV/01/02: 710 kg
2.1.6.	L1e-L7e	Safe load carrying capacity of load platform declared by manufacturer	:	TEV/00/00: 659 kg TEV/00/01, TEV/00/02: 600 kg TEV/01/00: 704 kg TEV/01/01, TEV/01/02: 645 kg
2.1.7.	L1e-L7e	Technically permissible maximum towable mass in case of (4)	:	Not applicable
2.1.7.1.	L1e-L7e	Technically permissible maximum laden mass of the combination	:	Not applicable
2.1.7.2.	L1e-L7e	Technically permissible maximum mass at the coupling point	:	Not applicable
2.1.8.	L1e-L7e	Mass of the optional equipment	:	TEV/00/00, TEV/01/00: Not applicable TEV/00/01, TEV/01/01: 59 kg TEV/00/02, TEV/01/02: 59 kg
2.1.9.	L1e-L7e	Mass of the superstructure	:	Not applicable
2.1.10.	L1e-L7e	Mass of the propulsion battery	:	TEV/00/00, TEV/00/01, TEV/00/02: 210 kg TEV/01/00, TEV/01/01, TEV/01/02: 165 kg
2.1.11.	L2e, L4e, L5e, L6e, L7e	Mass of the doors	:	Total: 2×18.5 kg = 37 kg
2.1.12.	L2e-U, L5e-B, L6e-BU, L7e-CU	Mass of the machines or equipment installed on the load platform area	:	Not applicable
2.1.13.	L1e-L7e	Mass of the gaseous fuel system as well as storage tanks for gaseous fuel	:	Not applicable

Item No.	(Sub) categories	Detailed information		
2.1.14.	L1e-L7e	Mass of the storage tanks to store compressed air	:	Not applicable
2.2.		Range of vehicle dimensions (overall)		
2.2.1.	L1e-L7e	Length	:	3690 mm
2.2.2.	L1e-L7e	Width	:	1400 mm
2.2.3.	L1e-L7e	Height	:	TEV/00/00, TEV/01/00: 1910 mm TEV/00/01, TEV/01/01: 1910 mm TEV/00/02, TEV/01/02: 2080 mm
2.2.4.	L1e-L7e	Wheelbase	:	1815 mm
2.2.4.1.	L4e	Wheelbase sidecar [28]	:	Not applicable
2.2.5.		Track width		
2.2.5.1.	L1e-L7e if equipped with twinned wheels L2e, L4e, L5e, L6e, L7e	Track width front	:	1125 mm
2.2.5.2.	L1e-L7e if equipped with twinned wheels	Track width rear	:	1170 mm
2.2.5.3.	L2e, L4e, L5e, L6e, L7e	Track width sidecar	:	Not applicable
2.2.6.	L7e-B	Front overhang	:	Not applicable
2.2.7.	L7e-B	Rear overhang	:	Not applicable
2.2.8.		Load platform dimensions		
2.2.8.1.	L2e-U, L5e-B, L6e-BU, L7e-B2, L7e-CU	Length of the load platform	:	TEV/00/00, TEV/01/00: 2050 mm TEV/00/01, TEV/01/01: 1990 mm (internal) TEV/00/02, TEV/01/02: 2040 mm (internal)

Item No.	(Sub) categories	Detailed information		
2.2.8.2.	L2e-U, L5e-B, L6e-BU, L7e-B2, L7e-CU	Width of load platform	:	TEV/00/00, TEV/01/00: 1250 mm TEV/00/01, TEV/01/01: 1235 mm (internal) TEV/00/02, TEV/01/02: 1250 mm (internal)
2.2.8.3.	L2e-U, L5e-B, L6e-BU, L7e-B2, L7e-CU	Height of load platform	:	TEV/00/00, TEV/01/00: 765 mm TEV/00/01, TEV/01/01: 770 mm TEV/00/02, TEV/01/02: 780 mm
2.2.9.		Centre of gravity		
2.2.9.1.	L2e-U, L5e-B, L6e-BU, L7e-B2, L7e-CU	Location of the centre of gravity forward of the rear axle Lcg	:	TEV/00/00: 1165 mm TEV/00/01: 1104 mm TEV/00/02: 1087 mm TEV/01/00: 942 mm TEV/01/01: 1129 mm TEV/01/02: 1121 mm
2.2.9.2.	L2e-U, L5e-B, L6e-BU, L7e-B2, L7e-CU	Location of the centre of gravity above the ground plane Hcg	:	TEV/00/00: 758 mm TEV/00/01: 743 mm TEV/00/02: 789 mm TEV/01/00: 574 mm TEV/01/01: 769 mm TEV/01/02: 727 mm
2.2.9.3.	L2e-U, L5e-B, L6e-BU, L7e-B2, L7e-CU	Location centre of gravity of loaded platform forward of the rear axle LcgLP	:	TEV/00/00: 829 mm TEV/00/01: 842 mm TEV/00/02: 853 mm TEV/01/00: 924 mm TEV/01/01: 873 mm TEV/01/02: 908 mm
2.2.10.		Miscellaneous dimensions		
		From 2.2.10.1. to 2.2.10.10.	:	Not applicable
3.		GENERAL POWERTRAIN CHARACTERISTICS		
3.1.		Manufacturer of the propulsion unit		
3.1.1.		*Combustion engine*		
	L1e-L7e	From 3.1.1.1. to 3.1.1.3.	:	Not applicable
3.1.2.		*Electric motor*		
3.1.2.1.	L1e-L7e	Manufacturer	:	Xuzhou Rock Drive Electric Technology Co., Ltd Make: ROCK

Item No.	(Sub) categories	Detailed information		
3.1.2.2.	L1e-L7e	Electric motor code (as marked on the engine or other means of identification)	:	TEV/00/00, TEV/00/01, TEV/00/02: TZ155XPS110B TEV/01/00, TEV/01/01, TEV/01/02: TZ155MPS092
3.1.3.		*Hybrid application*		
	L1e-L7e	From 3.1.3.1. to 3.1.3.4.	:	Not applicable
3.2.		Combustion engine		
	L1e-L7e	From 3.2.1. to 3.2.13.4.	:	Not applicable
3.3.		Pure electric and hybrid electric propulsion and control		
3.3.1.	L1e-L7e	Electric vehicle configuration	:	pure electric~~/hybrid electric/manpower-electric~~ (4)
3.3.2.	L1e-L7e	Brief description and schematic drawing of pure and hybrid electric propulsions and its control system(s)	:	Refer to drawing No. TEV-07-01
3.3.3.		*Electric propulsion motor*		
3.3.3.1.	L1e-L7e	Number of electric motors for propulsion	:	1
3.3.3.2.	L1e-L7e	Type (winding, excitation)	:	Winding
3.3.3.3.	L1e-L7e	Operating voltage	:	63.4 V AC
3.3.3.4.	L1e-L7e	~~15/~~30(4) minutes power(27)	:	TEV/00/00, TEV/00/01, TEV/00/02: 14.8 kW TEV/01/00, TEV/01/01, TEV/01/02: 7.5 kW
3.3.4.		*Propulsion batteries*		
3.3.4.1.	L1e-L7e	Primary propulsion battery		
3.3.4.1.1.	L1e-L7e	Number of cells	:	28
3.3.4.1.2.	L1e-L7e	Mass	:	TEV/00/00, TEV/00/01, TEV/00/02: 210 kg TEV/01/00, TEV/01/01, TEV/01/02: 165 kg

Item No.	(Sub) categories	Detailed information		
3.3.4.1.3.	L1e-L7e	Capacity	:	TEV/00/00, TEV/00/01, TEV/00/02: 230 Ah TEV/01/00, TEV/01/01, TEV/01/02: 150 Ah
3.3.4.1.4.	L1e-L7e	Voltage	:	89.6 V
3.3.4.1.5.	L1e-L7e	Position in the vehicle	:	Refer to drawing No. TEV-08-01
3.3.4.2.	L1e-L7e	Secondary propulsion battery		
3.3.4.2.1.	L1e-L7e	Number of cells	:	Not applicable
3.3.4.2.2.	L1e-L7e	Mass	:	Not applicable
3.3.4.2.3.	L1e-L7e	Capacity	:	Not applicable
3.3.4.2.4.	L1e-L7e	Voltage	:	Not applicable
3.3.4.2.5.	L1e-L7e	Position in the vehicle	:	Not applicable
3.3.5.		*Hybrid electric vehicle*		
	L1e-L7e	From 3.3.5.1. to 3.3.5.7.	:	Not applicable
3.3.6.		*Energy storage device*		
3.3.6.1.	L1e-L7e	Description	:	(battery, ~~capacitor, flywheel/generator~~) (4)
3.3.6.2.	L1e-L7e	Identification number	:	TEV/00/00, TEV/00/01, TEV/00/02: JM-2216040 TEV/01/00, TEV/01/01, TEV/01/02: JM-2216050 Refer to drawing No. TEV-08-01
* 3.3.6.3.	L1e-L7e	Kind of electrochemical couple	:	Lithium battery
3.3.6.4.	L1e-L7e	Energy (for battery: voltage and capacity Ah in 2h, for capacitor: J,…, for flywheel/generator: J,…,)	:	TEV/00/00, TEV/00/01, TEV/00/02: 89.6 V, 230 Ah TEV/01/00, TEV/01/01, TEV/01/02: 89.6 V, 150 Ah
3.3.6.5.	L1e-L7e	Charger	:	on-board~~/external/without~~ (4)
3.3.7.		*Electric motor (describe each type of electric motor separately)*		
3.3.7.1.	L1e-L7e	Primary use	:	Propulsion motor~~/generator~~ (4)
3.3.7.2.	L1e-L7e	When used as propulsion motor	:	Single-~~/multi-~~motors (number) (4)

Item No.	(Sub) categories	Detailed information		
3.3.7.3.	L1e-L7e	Working principle	:	Brushless AC permanent magnet motor
3.3.7.4.	L1e-L7e	Direct current/alternating current /number of phases	:	Alternating current/three phases
3.3.7.5.	L1e-L7e	Separate excitation/series/compound (4)	:	Separate excitation
3.3.7.6.	L1e-L7e	Synchronous/asynchronous (4)	:	Synchronous
3.3.8.		*Electric motor control unit*		
3.3.8.1.	L1e-L7e	Identification number	:	TEV/00/00, TEV/00/01, TEV/00/02: KTZ09X40PS1048 Refer to drawing No. TEV-06-01 TEV/01/00, TEV/01/01, TEV/01/02: KTZ09M45PS560 Refer to drawing No. TEV-06-02
3.3.9.		*Power controller*		
3.3.9.1.	L1e-L7e	Identification number	:	Not applicable
3.4.		Other engines, electric motors or combinations (specific information concerning the parts of these motors)		
	L1e-L7e	From 3.4.1. to 3.4.2.5.1.	:	Not applicable
3.5.		Drive-train and control (13)		
3.5.1.	L1e-L7e	Brief description and schematic drawing of the vehicle drive-train and its control system (gear shift control, clutch control or any other element of drive-train)	:	Refer to drawing No. TEV-10-01, TEV-10-02
3.5.2.		*Clutch*		
3.5.2.1.	L1e-L7e	Brief description and schematic drawing of the clutch and its control system	:	Not applicable
3.5.3.		*Transmission*		
3.5.3.1.	L1e-L7e	Brief description and schematic drawing of gear shift system(s) and its control	:	Refer to drawing No. TEV-10-01, TEV-10-02
3.5.3.2.	L1e-L7e	Drawing of the transmission	:	Refer to drawing No. TEV-10-01, TEV-10-02
3.5.3.3.	L1e-L7e	Type (mechanical, ~~hydraulic, electric, manual / manual automated / automatic / CVT /~~ other (indicate)) (4)	:	Mechanical, other (Reduction gearbox)
3.5.3.4.	L1e-L7e	A brief description of the electrical/electronic components (if any)	:	Not applicable
3.5.3.5.	L1e-L7e	Location relative to the engine	:	Not applicable

Item No.	(Sub) categories	Detailed information		
3.5.3.6.	L1e-L7e	Method of control	:	Selection of R, N, D by rotation of knob
3.5.4.	L1e-L7e	*Gear ratios*		

Variant 00:

Overview gear ratios				
Gear (24)	Internal transmission ratios (ratios of engine to transmission output shaft revolutions)	Final drive ratio(s) (ratio of transmission output shaft to driven wheel revolutions)	Total gear ratios	Ratio (engine speed/ vehicle speed) for manual transmission only
Forward	1	10.400	10.400	/
Reverse	1	10.400	10.400	/

(+) Continuously variable transmission

Variant 01:

Overview gear ratios				
Gear (24)	Internal transmission ratios (ratios of engine to transmission output shaft revolutions)	Final drive ratio(s) (ratio of transmission output shaft to driven wheel revolutions)	Total gear ratios	Ratio (engine speed/ vehicle speed) for manual transmission only
Forward	1	12.603	12.603	/
Reverse	1	12.603	12.603	/

(+) Continuously variable transmission

3.5.4.1.	L3e-AxE, L3e-AxT	Final drive ratio	:	Not applicable
3.5.4.2.	L3e-AxE, L3e-AxT	Overall gear ratio in highest gear	:	Not applicable
3.6.		Safe-cornering device		
3.6.1.	L1e-L7e, equipped with twinned wheels, L2e, L5e, L6e, L7e	Safe-cornering device (Annex VIII to Regulation (EU) No 168/2013	:	yes~~/no~~ (4); differential~~/other~~ (4)
3.6.2.	L1e-L7e, equipped with twinned wheels, L2e, L5e, L6e, L7e	Differential lock	:	~~yes~~/no~~/optional~~ (4)
3.6.3.	L1e-L7e	Brief description and schematic drawing of the safe-cornering device, the differential lock and their control systems	:	Refer to drawing No. TEV-11-01
3.7.		Suspension and control		
3.7.1.	L1e-L7e	Brief description and schematic drawing of suspension and its control system	:	Refer to drawing No. TEV-12-01, TEV-12-02, TEV-12-03

Item No.	(Sub) categories	Detailed information		
3.7.2.	L1e-L7e	Drawing of the suspension arrangements	:	Refer to drawing No. TEV-12-01, TEV-12-02, TEV-12-03
3.7.3.	L1e-L7e	Level adjustment	:	~~yes~~/no/~~optional~~ (4)
3.7.4.	L1e-L7e	Brief description of the electrical/ electronic components	:	Not applicable
3.7.5.	L1e-L7e	Stabilisers	:	~~yes/~~no/~~optional~~ (4)
3.7.6.	L1e-L7e	Shock absorbers	:	yes/~~no/optional~~ (4)
3.8.		Passenger-compartment heating system and air-conditioning		
3.8.1.		*Passenger-compartment heating system*		
3.8.1.1.	L2e, L5e-B, L6e-B, L7e	An overall drawing of the heating system giving its location on the vehicle and the arrangement of the sound damping devices (including the position of the heat exchange points))	:	Refer to drawing No. TEV-13-01
3.8.1.2.	L2e, L5e-B, L6e-B, L7e	An overall drawing of the heat-exchanger used in systems utilising the heat from the exhaust gases, or of the parts where that exchange takes place (in the case of heating systems using the heat provided by the engine cooling air)	:	Not applicable
3.8.1.3.	L2e, L5e-B, L6e-B, L7e	A sectional drawing of the heat-exchanger or parts where heat exchange takes place, together with a statement of the wall thickness, of the materials used and the characteristics of their surface	:	Not applicable
3.8.1.4.	L2e, L5e-B, L6e-B, L7e	Specifications regarding the method of manufacture and technical data relating to other major components of the heating system, such as the fan		Refer to drawing No. TEV-13-01 Specifications of PTC: Power: 1000 W, voltage: 89.6 V
3.8.2.		*Air-conditioning*		
3.8.2.1.	L2e, L5e-B, L6e-B, L7e	Brief description and schematic drawing of air-conditioning and its control system	:	Refer to drawing No. TEV-14-01 Specifications of air-conditioning: Power: 1000 W, voltage: 89.6 V, mass: 14.5 kg
3.8.2.2.	L2e, L5e-B, L6e-B, L7e	Gas used as refrigerant in the air-conditioning system	:	R134a
3.8.2.3.	L2e, L5e-B, L6e-B, L7e	The air-conditioning system is designed to contain fluorinated greenhouse gases with global warming potential higher than 150	:	~~yes/~~no (4)

Item No.	(Sub) categories	Detailed information		
3.8.2.3.1.	L2e, L5e-B, L6e-B, L7e	Drawing and brief description of the air-conditioning system, including the reference or part number and material of the leak components	:	Not applicable
3.8.2.3.2.	L2e, L5e-B, L6e-B, L7e	Leakage of the air-conditioning system	:	Not applicable
3.8.2.3.3.	L2e, L5e-B, L6e-B, L7e	Reference or part number and material of the components of the system and test information (e.g. test report number, Type-approval number, etc.)	:	Not applicable
3.8.2.3.4.	L2e, L5e-B, L6e-B, L7e	Overall leakage/year of the entire system	:	Not applicable
3.9.		Cycles designed to pedal		
	L1e	From 3.9.1. to 3.9.4.	:	Not applicable
4.		GENERAL INFORMATION ON ENVIRONMENTAL AND PROPULSION PERFORMANCE		
4.0.		General information on environmental and propulsion performance		
4.0.1.	L1e-L7e	Environmental step	:	Euro (~~3/4/5/~~ 5^{+}) (4)
4.0.2	L1e-L7e	Fuel consumption (provide details for each reference fuel tested)	:	Not applicable
4.0.3	L1e-L7e	CO_2 emissions(25)	:	Not applicable
4.0.4	L1e-L7e	Energy consumption(25)	:	TEV/00/00, TEV/00/01, TEV/00/02: 88 Wh/km TEV/01/00, TEV/01/01, TEV/01/02: 115 Wh/km
4.0.5	L1e-L7e	Electric range(25)	:	TEV/00/00, TEV/00/01, TEV/00/02: 191 km TEV/01/00, TEV/01/01, TEV/01/02: 151 km
4.1.		Tailpipe emission-control system		
	L1e-L7e	From 4.1.1. to 4.1.8.1.	:	Not applicable
4.2.		Crankcase emission control system		
4.2.1.	L1e-L7e	Configuration of crank-case gas recycling system (breather system, positive crank-case ventilation system, other) (4) (description and drawings)	:	Not applicable

Item No.	(Sub) categories	Detailed information		
4.3.		Evaporative emission control system		
	L1e-L7e	From 4.3.1. to 4.3.8.	:	Not applicable
4.4.		Additional information on environmental and propulsion unit performance		
	L1e-L7e	From 4.4.1. to 4.4.4.	:	Not applicable
5.		VEHICLE PROPULSION FAMILY		
5.1.	L1e-L7e	To define the vehicle propulsion family, the manufacturer shall submit the information required for classification criteria set out in point 3 of Annex XI to Commission Delegated Regulation (EU) No 134/2014, if not already provided in the information document	:	Not applicable
6.		INFORMATION ON FUNCTIONAL SAFETY		
6.1.		Audible warning devices		
6.1.1.	L1e-L7e	Summary description of device(s) used and their purpose	:	Electro-magnetic with resonator disc, single-tone. Used to warn other traffic and pedestrians. Make: ZHONGYE and others see horn certificate Type: DL137-12V Approval mark: II E9 001457
6.1.2.	L1e-L7e	Drawing(s) showing the location of the audible warning device(s) in relation to the structure of the vehicle	:	Refer to drawing No. TEV-15-01
6.1.3.	L1e-L7e	Details of the method of attachment, including the part of the vehicle structure to which the audible warning device(s) is (are) attached	:	Refer to drawing No. TEV-15-01
6.1.4.	L1e-L7e	Electrical/pneumatic circuit diagram	:	Refer to drawing No. TEV-15-01
6.1.4.1.	L1e-L7e	Voltage	:	~~AC~~/DC (4)
6.1.4.2.	L1e-L7e	Rated voltage or pressure	:	12V
6.1.5.	L1e-L7e	Drawing of the mounting device	:	Refer to drawing No. TEV-15-01
6.2.		Braking, including anti-lock and combined braking systems		
6.2.1.	L1e-L7e	Characteristics of the brakes, including details and drawings of the drums, discs, hoses, make and type of shoe/pad assemblies and/or linings, effective braking areas, radius of drums, shoes or discs, mass of drums, adjustment devices, relevant parts of the axle(s) and suspension, levers, pedals (4)	:	Refer to drawing No. TEV-16-01, TEV-17-01, TEV-18-01, TEV-19-01, TEV-20-01, TEV-21-01, TEV-22-01, TEV-23-01, TEV-24-01, TEV-25-01, TEV-25-02

Item No.	(Sub) categories	Detailed information		
6.2.2.	L1e-L7e	Operating diagram, description and/or drawing of the braking system, including details and drawings of the transmission and controls as well as a brief description of the electrical and/or electronic components used in the braking system (4)	:	Refer to drawing No. TEV-16-01, TEV-17-01, TEV-18-01, TEV-19-01, TEV-20-01, TEV-21-01, TEV-22-01, TEV-23-01, TEV-24-01, TEV-25-01, TEV-25-02
6.2.2.1.	L1e-L7e	Front, rear and sidecar brakes, disc and/or drum (4)	:	Front: disc Rear: disc
6.2.2.2.	L1e-L7e	Parking braking system	:	Yes, mechanical, manual Refer to drawing No. TEV-16-01
6.2.2.3.	L1e-L7e	Any additional braking system	:	Not applicable
6.2.3.	L1e-L7e	Vehicle is equipped to tow a trailer with no brake/overrun brake/electric/ pneumatic/hydraulic service brakes	:	~~yes~~/no (4)
6.2.4.	L1e-L7e	Anti-lock/Combined braking system		
6.2.4.1.	L1e-L7e	Anti-lock braking system	:	~~yes/~~no~~/optional~~ (4)
6.2.4.2.	L1e-L7e	Combined braking system	:	~~yes/~~no~~/optional~~ (4)
6.2.4.3.	L1e-L7e	Anti-lock and combined braking system	:	yes~~/no/optional~~ (4)
6.2.4.4.	L1e-L7e	Schematic drawing(s)	:	Refer to drawing No. TEV-16-01
6.2.5.	L1e-L7e	Hydraulic reservoir(s) (volume and location)	:	Refer to drawing No. TEV-16-01, TEV-17-01
6.2.6.	L1e-L7e	Particular characteristics of the braking system(s)		
6.2.6.1.	L1e-L7e	Brake shoes and/or pads (4)	:	Refer to drawing No. TEV-19-01, TEV-20-01
6.2.6.2.	L1e-L7e	Linings and/or pads (indicate make, type, grade of material or identification mark)	:	Refer to drawing No. TEV-21-01, TEV-22-01
6.2.6.3.	L1e-L7e	Brake levers and/or pedals (4)	:	Refer to drawing No. TEV-16-01, TEV-23-01, TEV-24-01
6.2.6.4.	L1e-L7e	Other devices (where applicable): drawing and description	:	Not applicable
6.3.		Electrical safety		
6.3.1.	L1e-L7e	Brief description of the power circuit components installation and drawings/ photographs showing the location of the power circuit components installation	:	Refer to drawing No. TEV-26-01
6.3.2.	L1e-L7e	Schematic diagram of all electrical functions included in power circuit	:	Refer to drawing No. TEV-27-01

Item No.	(Sub) categories	Detailed information		
6.3.3.	L1e-L7e	Working voltage(s) (V)	:	Power working voltage: 89.6 V DC Other electric components voltage: 12 V DC
6.3.4.	L1e-L7e	Description of protection against electric-shocks	:	Using terminal box that made by high and low pressure polyethylene material, and nylon plug to protect against electric-shocks Refer to drawing No. TEV-28-01
6.3.5.	L1e-L7e	Fuse and/or circuit breaker	:	yes/~~no/optional~~ (4), fuse
6.3.5.1.	L1e-L7e	Diagram showing the functional range	:	Refer to drawing No. TEV-29-01
6.3.6.	L1e-L7e	Configuration of power wiring harness	:	Refer to drawing No. TEV-30-01
6.4.		Front and rear protective structures		
6.4.1.		*Front protective structure*		
6.4.1.1.	L1e-L7e	Detailed technical description (including photographs or drawings)	:	Refer to drawing No. TEV-31-01
6.4.1.2.	L1e-L7e	Materials used	:	PP
6.4.2.		*Rear protective structure*		
6.4.2.1.	L1e-L7e	Detailed technical description (including photographs or drawings)	:	Refer to drawing No. TEV-31-02
6.4.2.2.	L1e-L7e	Materials used	:	PP
6.5.		Glazing, windscreen wipers and washers, and defrosting and demisting systems		
6.5.1.		Windscreen		
6.5.1.1.	L2e, L5e, L6e, L7e	Materials used	:	Ordinary laminated-glass windscreen (6.76 mm) Class: II Make: Approval mark: II E24 43R-010118
6.5.1.2.	L2e, L5e, L6e, L7e	Method of mounting	:	Pasted by glue
6.5.1.3.	L2e, L5e, L6e, L7e	Angle of inclination	:	60°
6.5.1.4.	L2e, L5e, L6e, L7e	Windscreen accessories and the position in which they are fitted, together with a brief description of any electrical/electronic components	:	Not applicable
6.5.1.5.	L2e, L5e, L6e, L7e	Drawing of the windscreen with dimensions	:	Refer to drawing No. TEV-32-01, TEV-32-02
6.5.2.		*Other windows*		

Item No.	(Sub) categories	Detailed information		
6.5.2.1.	L2e, L5e, L6e, L7e	Materials used	:	Option 1: Uniformly-toughened glass panes Class: II Make: Approval mark: E24 43R-010116 Option 2: Uniformly-toughened glass panes Class: III Make: Approval mark: E24 43R-010026 Option 3: Uniformly-toughened glass panes Class: II Make: Approval mark: E13 43R-019765
6.5.2.2.	L2e, L5e, L6e, L7e	A brief description of the electrical/ electronic components (if any) of the window lifting mechanism	:	Electric window lift Refer to drawing No. TEV-33-01
6.5.3.		*Opening roof glazing*		
6.5.3.1.	L2e, L5e, L6e, L7e	Materials used	:	Not applicable
6.5.4.		*Other glass panes*		
6.5.4.1.	L2e, L5e, L6e, L7e	Materials used	:	Not applicable
6.6.		Windscreen wiper(s)		
6.6.1.	L2e, L5e, L6e, L7e	Detailed technical description (including photographs or drawings)	:	Refer to drawing No. TEV-34-01
6.7.		Windscreen washer		
6.7.1.	L2e, L5e, L6e, L7e	Detailed technical description (including photographs or drawings)	:	Refer to drawing No. TEV-35-01
6.7.2.	L2e, L5e, L6e, L7e	Capacity of the reservoir	:	1.2 L
6.8.		Defrosting and demisting		
6.8.1.	L2e, L5e, L6e, L7e	Detailed technical description (including photographs or drawings)	:	Refer to drawing No. TEV-13-01
6.9.		Driver-operated controls including identification of controls, tell-tales and indicators		

Item No.	(Sub) categories	Detailed information		
6.9.1.	L1e-L7e	Arrangement and identification of controls, tell-tales and indicators	:	Refer to drawing No. TEV-36-01
6.9.2.	L1e-L7e	Photographs and/or drawings of the arrangement of symbols and controls, tell-tales and indicators	:	Refer to drawing No. TEV-36-01
6.9.3.	L1e-L7e	Controls, tell-tales and indicators for which, when fitted, identification is mandatory, including the identification symbols to be used for that purpose	:	Refer to drawing No. TEV-36-01
6.9.4.	L1e-L7e	Summary table: the vehicle is equipped with the following driver-operated controls, including indicators and tell-tales(4)	:	See Table 6.9.4.
6.9.5.	L1e-L7e	Controls, tell-tales and indicators for which, when fitted, identification is optional, and symbols which shall be used if they are to be identified	:	See Table 6.9.5.
6.10.		Speedometer and odometer		
6.10.1.		*Speedometer*		
6.10.1.1.	L1e-L7e	Photographs and/or drawings of the complete system	:	Manufacturer: Ningbo Boxin Electrical Appliance Co., Ltd. Type: JM1020-2101000 Refer to drawing No. TEV-37-01
6.10.1.2.	L1e-L7e	Vehicle speed range displayed	:	0~85 km/h, 0~53 mph
6.10.1.3.	L1e-L7e	Tolerance of the measuring mechanism of the speedometer	:	$0 \leq (V1-V2) \leq 0.1V2 + 4$ km/h V1: display speed , V2: actual speed
6.10.1.4.	L1e-L7e	Technical constant of the speedometer	:	1 signal/min = 2.288×10^{-3} km/h
6.10.1.5.	L1e-L7e	Method of operation and description of the drive mechanism	:	The ABS calculates the vehicle speed through the wheel Hall signal sent by the wheel speed sensor, and the instrument panel displays the vehicle speed by reading the CAN message
6.10.1.6.	L1e-L7e	Overall transmission ratio of the drive mechanism	:	48 electromagnetic signals / 1 wheel cycle
6.10.2.		*Odometer*		
6.10.2.1.	L1e-L7e	Tolerance of the measuring mechanism of the odometer	:	0~10%
6.10.2.2.	L1e-L7e	Method of operation and description of the drive mechanism	:	See item 6.10.1.5.
6.11.		Installation of lighting, light-signalling devices, including automatic switching of lighting		

Item No.	(Sub) categories	Detailed information		
6.11.1.	L1e-L7e	List of all devices (mentioning the number, make(s),type, component type-approval mark(s), the maximum intensity of the main-beam headlamps, colour, the corresponding tell-tale)	:	Refer to drawing No. TEV-38-01
6.11.2.	L1e-L7e	Diagram showing the location of the lighting and light-signalling devices	:	Refer to drawing No. TEV-39-01
6.11.3.	L1e-L7e	Hazard warning lamps	:	Yes, the hazard warning signal is activated by means of separate control, with simultaneous operation of all direction indicator lamps.
6.11.4.	L1e-L7e	Brief description of the electrical and/or electronic components used in the lighting system and in the light-signalling system	:	Not applicable
6.11.5.	L1e-L7e	For every lamp and reflector, supply the following information (in writing and/or by diagram)		
6.11.5.1.	L1e-L7e	Drawing showing the extent of the illuminating surface	:	See component's certificates
6.11.5.2.	L1e-L7e	Method used to define the apparent surface in accordance with point 2.10 of UNECE Regulation No 48 (OJ L 323, 6.12.2011, p. 46)	:	See component's certificates
6.11.5.3.	L1e-L7e	Axis of reference and centre of reference	:	See component's certificates
6.11.5.4.	L1e-L7e	Method of operation of concealable lamps	:	Not applicable
6.11.6.	L1e-L7e	Description/drawing and type of headlamp levelling device (e.g. automatic, stepwise manually adjustable, continuously manually adjustable) (4)	:	Stepwise manually adjustable
6.11.6.1.	L1e-L7e	Control device	:	Set screw
6.11.6.2.	L1e-L7e	Reference marks	:	Not applicable
6.11.6.3.	L1e-L7e	Marks assigned for loading conditions	:	Not applicable
6.12.		Rearward visibility		
6.12.1.		*Rear-view mirrors (stating for each mirror)*		
6.12.1.1.	L1e-L7e	Drawing(s) for the identification of the mirror showing the position of the mirror relative to the vehicle structure	:	Make: 威克利 Type: DZ-1082-L/DZ-1082-R Approval mark: III E57 050364 Refer to drawing No. TEV-40-01
6.12.1.2.	L1e-L7e	Details of the method of attachment including that part of the vehicle structure to which it is attached	:	Refer to drawing No. TEV-41-01

Item No.	(Sub) categories	Detailed information		
6.12.1.3.	L1e-L7e	A brief description of the electronic components of the adjustment system	:	Not applicable
6.12.2.	L1e-L7e	*Devices for indirect vision other than mirrors*		
6.12.2.1.	L1e-L7e	Description of the device	:	Not applicable
6.12.2.2.	L1e-L7e	In the case of a camera-monitor device, the detection distance (mm), contrast, luminance range, glare correction, display performance (black and white/colour (4)), image repetition frequency, luminance reach of the monitor (4)	:	Not applicable
6.12.2.3.	L1e-L7e	Sufficiently detailed drawings to identify the complete device, including installation instructions; the position for the EU type-approval mark has to be indicated on the drawings	:	Not applicable
6.13.		Rollover protective structure (ROPS)		
	L7e-B2	From 6.13.1. to 6.13.4.2	:	Not applicable
6.14.		Safety belts and/or other restraints		
6.14.1.	L2e, L4e, L5e-B, L6e-B, L7e	Number and position of safety belts and restraint systems and seats on which they can be used, please fill out table below: (L = left side, R = right side, C = centre)		

Safety belt configuration and associated information					
			Complete EU type-approval mark	Variant, if applicable	Belt adjustment device for height (indicate yes/no/optional)
First row of seats		L	Ar4m E13 08 10153	/	no
		C	/	/	/
		R	Ar4m E13 08 10153	/	no
Second row of seats		L	/	/	/
		C	/	/	/
		R	/	/	/
L = Left, C = Centre, R = Right					

6.14.2.	L2e, L4e, L5e-B, L6e-B, L7e	Description of a specific type of belt, with one anchorage attached to the seat back-rest or incorporating an energy-dissipation device	:	Not applicable
6.14.3.	L2e, L4e, L5e-B, L6e-B, L7e	Number and location of the anchorages	:	Refer to drawing No. TEV-42-01
6.14.4.	L2e, L4e, L5e-B, L6e-B, L7e	Brief description of electrical/electronic components	:	Not applicable
6.15.		Safety belt anchorages		

Item No.	(Sub) categories	Detailed information		
6.15.1.	L2e, L4e, L5e-B, L6e-B, L7e	Photographs and/or drawings of the bodywork showing the true, effective location and dimensions of the anchorages, together with an indication of the R-point	:	Refer to drawing No. TEV-42-01
6.15.2.	L2e, L4e, L5e-B, L6e-B, L7e	Drawings of the anchorages and the parts of the vehicle structure to which they are attached (together with a statement on the nature of the materials used)	:	Refer to drawing No. TEV-42-01
6.15.3.	L2e, L4e, L5e-B, L6e-B, L7e	Designation of the types of belts (14) authorised for attachment to the anchorages on the vehicle	:	See table below

Safety belt anchorage configuration and associated information						
					Anchorage location	
					Vehicle structure	Seat structure
First row of seats						
Right-hand seat		Lower anchorages		outboard inboard	Ar4m Ar4m	-- --
		Upper anchorages			Ar4m	--
Centre seat		Lower anchorages		right left	-- --	-- --
		Upper anchorages			--	--
Left-hand seat		Lower anchorages		outboard inboard	Ar4m Ar4m	-- --
		Upper anchorages			Ar4m	--
Second row of seats						
Right-hand seat		Lower anchorages		outboard inboard	-- --	-- --
		Upper anchorages			--	--
Centre seat		Lower anchorages		right left	-- --	-- --
		Upper anchorages			--	--
Left-hand seat		Lower anchorages		outboard inboard	-- --	-- --
		Upper anchorages			--	--

6.15.4.	L2e, L4e, L5e-B, L6e-B, L7e	Type-approval mark for each position	:	Ar4m E13 08 10153
6.15.5.	L2e, L4e, L5e-B, L6e-B, L7e	Special devices (example: seat-height adjustment, preloading device, etc.)	:	Not applicable
6.15.6.	L2e, L4e, L5e-B, L6e-B, L7e	Photographs and/or drawings of the bodywork showing the true, effective location and dimensions of the anchorages, together with an indication of the R-point	:	Refer to drawing No. TEV-42-01, TEV-43-01, TEV-45-01

Item No.	(Sub) categories	Detailed information		
6.15.7.	L2e, L4e, L5e-B, L6e-B, L7e	Observation	:	Row 1, 2 seats, left and right
6.16.		Seating positions (saddles and seats)		
6.16.1.	L1e-L7e	Number of seating positions	:	2
6.16.1.1.	L2e, L5e, L6e, L7e	Location and arrangement (8)	:	r1:1L, 1R
6.16.2.	L1e-L7e	Seating position configuration	:	seat~~/saddle~~ (4)
6.16.3.	L1e-L7e	Description and drawings of		
6.16.3.1.	L1e-L7e	The seats and their anchorages	:	Refer to drawing No. TEV-42-01, TEV-43-01
6.16.3.2.	L1e-L7e	The adjustment system	:	Refer to drawing No. TEV-44-01
6.16.3.3.	L1e-L7e	The displacement and locking systems	:	Refer to drawing No. TEV-44-01
6.16.3.4.	L1e-L7e	The seat-belt anchorages incorporated in the seat structure	:	Refer to drawing No. TEV-42-01
6.16.3.5.	L1e-L7e	The parts of the vehicle used as anchorages	:	Refer to drawing No. TEV-42-01
6.16.4.	L2e, L4e, L5e-B, L6e-B, L7e	Coordinates or drawing of the R-point(s) of all seating positions		
6.16.4.1.	L2e, L4e, L5e-B, L6e-B, L7e	Driver's seat	:	Refer to drawing No. TEV-43-01
6.16.4.2.	L2e, L4e, L5e-B, L6e-B, L7e	All other seating positions	:	Refer to drawing No. TEV-43-01
6.16.5.	L1e-L7e	Design torso angle		
6.16.5.1.	L1e-L7e	Driver's seat	:	10 degrees
6.16.5.2.	L1e-L7e	All other seating positions	:	10 degrees
6.16.6.	L1e-L7e	Range of seat adjustment		
6.16.6.1.	L1e-L7e	Driver's seat	:	Refer to drawing No. TEV-43-01
6.16.6.2.	L1e-L7e	All other seating positions	:	Refer to drawing No. TEV-43-01
6.17.		Steer-ability, cornering properties and turn-ability		
6.17.1.	L1e-L7e	Schematic diagram of steered axle(s) showing steering geometry	:	Refer to drawing No. TEV-46-01
6.17.2.		*Transmission and control of steering*		
6.17.2.1.	L1e-L7e	Configuration of steering transmission (specify for front and rear)	:	Refer to drawing No. TEV-46-01

Item No.	(Sub) categories	Detailed information		
6.17.2.2.	L1e-L7e	Linkage to wheels (including other than mechanical means; specify for front and rear)	:	The steering wheel drive the cardan joint and steering gear box assembly operating on the front wheels
6.17.2.2.1.	L1e-L7e	A brief description of the electrical/ electronic components	:	Electrical power steering system mainly consists of reduction mechanism and ECU, etc.
6.17.2.3.	L1e-L7e	Diagram of the steering transmission	:	Refer to drawing No. TEV-46-01
6.17.2.4.	L2e, L5e, L6e, L7e	Schematic diagram(s) of the steering control(s)	:	Refer to drawing No. TEV-46-01
6.17.2.5.	L2e, L5e, L6e, L7e	Range and method of adjustment of the steering control(s)	:	Mechanical limit, no adjustment range
6.17.2.6.	L2e, L5e, L6e, L7e	Method of assistance	:	Mechanical and electronic assistance
6.17.3.		*Maximum steering angle of the wheels*		
6.17.3.1.	L1e-L7e	To the right	:	Left wheel: 37 degrees; Right wheel: 36 degrees; number of turns of the steering wheel (or equivalent data): 1.42 turns
6.17.3.2.	L1e-L7e	To the left	:	Left wheel: 35 degrees; Right wheel: 34 degrees; number of turns of the steering wheel (or equivalent data): 1.42 turns
6.18.		Tyres/wheels combination		
6.18.1.		*Tyres*		

Axle	Tyre size	LCI	Load (kg)	Speed (rating)	Speed (km/h)	Pressure (kPa)	Rim size	Rolling circ.
Front	175/65R14	82	475	H	210	300	5.5*14	1830.6 mm
Rear	175/65R14	82	475	H	210	300	5.5*14	1830.6 mm

6.18.1.1.		Size designation		
6.18.1.1.1.	L1e-L7e	Axle 1	:	See item 6.18.1.
6.18.1.1.2.	L1e-L7e	Axle 2	:	See item 6.18.1.
6.18.1.1.3.	L4e	Sidecar wheel	:	Not applicable
6.18.1.2.	L1e-L7e	Minimum load-capacity index	:	

State	Front	Rear
TEV/00/00	73 (365 kg)	79 (437 kg)
TEV/00/01	74 (375 kg)	79 (437 kg)
TEV/00/02	75 (387 kg)	79 (437 kg)
TEV/01/00	77 (412 kg)	76 (400 kg)
TEV/01/01	76 (400 kg)	77 (412 kg)
TEV/01/02	77 (412 kg)	76 (400 kg)

Item No.	(Sub) categories	Detailed information		
6.18.1.3.	L1e-L7e	Minimum-speed category symbol compatible with the theoretical maximum design vehicle speed	:	F
6.18.1.4.	L1e-L7e	Tyre pressure(s) as recommended by the vehicle manufacturer	:	See item 6.18.1.
6.18.2.		*Wheels*		
6.18.2.1.	L1e-L7e	Rim size(s)	:	See item 6.18.1.
6.18.2.2.	L1e-L7e	Categories of use compatible with the vehicle	:	Normal or snow
6.18.2.3.	L1e-L7e	Nominal rolling circumference	:	See item 6.18.1.
6.19.		Vehicle maximum speed limitation plate and its location on the vehicle		
	L7e-B1 and L7e-B2	From 6.19.1. to 6.19.6.	:	Not applicable
6.20.		Vehicle occupant protection, including interior fittings and vehicle doors		
6.20.1.		*Bodywork*		
6.20.1.1.	L2e, L5e-B, L6e-B, L7e	Materials used and methods of construction	:	Cold rolled steel Q235, sheet metal stamping welded type
6.20.2.		*Occupant doors, latches and hinges*		
6.20.2.1.	L2e, L5e, L6e, L7e	Number of doors, and its configuration, dimensions and maximum angle of opening (5)	:	2:1L, 1R Refer to drawing No. TEV-47-01
6.20.2.2.	L2e, L5e, L6e, L7e	Drawing of latches and hinges and of their position in the doors	:	Refer to drawing No. TEV-48-01, TEV-49-01
6.20.2.3.	L2e, L5e, L6e, L7e	Technical description of latches and hinges	:	Metal hinge and lock. When the door is locked either internal handle or external handle can't open the door.
6.20.2.4.	L2e, L5e, L6e, L7e	Details, including dimensions, of entrances, steps and necessary handles where applicable	:	Refer to drawing No. TEV-50-01
6.20.3.		*Interior protection for occupants*		
6.20.3.1.	L2e, L5e, L6e, L7e	Photographs, drawings and/or an exploded view of the interior fittings, showing the parts in the passenger compartment and the materials used (with the exception of interior rear view mirrors, arrangement of controls, seats and the rear part of seats), roof and opening roof, backrest	:	Refer to drawing No. TEV-51-01

Item No.	(Sub) categories	Detailed information		
6.20.4.		Head restraints		
6.20.4.1.	L2e, L5e, L6e, L7e	Head restraints	:	~~integrated/~~detachable~~/separate~~ (4)
6.20.4.2.	L2e, L5e, L6e, L7e	Detailed description of the head restraint, specifying in particular the nature of the padding material or materials and, where applicable, the position and specifications of the braces and anchorage pieces for the type of seat for which approval is sought	:	Material: Sponge Refer to drawing No. TEV-44-01
6.20.4.3.	L2e, L5e, L6e, L7e	In the case of a 'separate' head restraint	:	Not applicable
6.20.4.3.1.	L2e, L5e, L6e, L7e	Detailed description of the structural zone to which the head restraint is intended to be fixed	:	Not applicable
6.20.4.3.2.	L2e, L5e, L6e, L7e	Scale drawings of the significant parts of the structure and the head restraint	:	Not applicable
6.21.		Maximum continuous total power and/or maximum vehicle speed limitation by design		
6.21.1.		Propulsion and/or drive-train output governors		
6.21.1.1.	L1e-L7e	Number (minimum two, exemption L3e-A3 and L4e-A3)	:	2
6.21.1.2.	L1e-L7e	How is the redundancy of governors ensured?	:	1. Reduction of the maximum power output of one electric motor based on the rotation speed as sensed internally to the electric motor. 2. Physical vehicle speed limitation by means of external components such as a maximum achievable revolution speed of an electric motor.
6.21.1.3.	L1e-L7e	Nominal cut-off point no 1		
6.21.1.3.1.	L1e-L7e	Engine/motor/drive-train rotation speed at which cut-off starts under load	:	TEV/00/00, TEV/00/01, TEV/00/02: 7600 min^{-1} TEV/01/00, TEV/01/01, TEV/01/02: 7900 min^{-1}
6.21.1.3.2.	L1e-L7e	Maximum rotation speed at the minimum engine load	:	TEV/00/00, TEV/00/01, TEV/00/02: 7600 min^{-1} TEV/01/00, TEV/01/01, TEV/01/02: 7900 min^{-1}
6.21.1.4.	L1e-L7e	Nominal cut-off point no 2		

Item No.	(Sub) categories	Detailed information		
6.21.1.4.1.	L1e-L7e	Engine/motor/drive-train rotation speed at which cut-off starts under load (4)	:	Not applicable
6.21.1.4.2.	L1e-L7e	Maximum rotation speed at the minimum engine load	:	Not applicable
6.21.1.5.	L1e-L7e	The stated purpose of governor(s)	:	maximum design vehicle speed limitation ~~/maximum power limitation/engine over-speed protection~~ (4)
7.		INFORMATION ON VEHICLE CONSTRUCTION		
7.1.		Coupling devices and attachments		
	L1e-L7e	From 7.1.1. to 7.1.6.	:	Not applicable
7.2.		Devices to prevent unauthorised use		
7.2.1.		*Protective device*		
7.2.1.1.	L1e-L7e	Summary description of protective device(s) used	:	Locks the steering. Refer to drawing No. TEV-52-01
7.2.2.		*Vehicle immobiliser*		
7.2.2.1.	L1e-L7e	Technical description of the vehicle immobiliser and of the measures taken against inadvertent activation	:	Not applicable
7.2.3.		*Alarm system*		
7.2.3.1.	L1e-L7e	Description of the alarm system and of the vehicle parts involved in its installation	:	Not applicable
7.2.3.2.	L1e-L7e	List of the main components comprising the alarm system	:	Not applicable
7.3.		Electromagnetic compatibility (EMC)		
7.3.1.	L1e-L7e	Requirements under UNECE Regulation No 10 (OJ L 254, 20.9.2012, p. 1) are met with relevant documentation included in the information document	:	yes~~/no~~ (4)
7.3.2.	L1e-L7e	Table or drawing of radio-interference control equipment	:	Refer to drawing No. TEV-26-01
7.3.3.	L1e-L7e	Particulars of the nominal value of the direct-current resistance, and, in the case of resistive ignition cables, of their nominal resistance per metre	:	Not applicable
7.4.		External projections		

Item No.	(Sub) categories	Detailed information		
7.4.1.	L1e-L7e vehicles with bodywork	General arrangement (drawing or photographs accompanied if necessary by dimensional details and/or text) indicating the position of the attached sections and views, of any parts of the exterior surface which can be regarded as critical for external projections, for example, and where relevant: bumpers, floor line, door and window pillars, air-intake grilles, radiator grille, windscreen wipers, rain gutter channels, handles, slide rails, flaps, door hinges and locks, hooks, eyes, winches, decorative trim, badges, emblems and recesses and any other parts of the exterior surface which can be regarded as critical (e.g. lighting equipment)	:	Refer to drawing No. TEV-53-01, TEV-53-02, TEV-53-03
7.5.		Fuel storage		
	L1e-L7e	From 7.5.1. to 7.5.3.1.	:	Not applicable
7.6.		On-board diagnostics (OBD) functional requirements		
7.6.1		*On-board diagnostics system*		
7.6.1.1.	L1e-L7e	Stage I	:	yes/~~no~~[4] and/or
7.6.1.2.	L1e-L7e	Stage II	:	~~yes/~~no[4]
7.6.2.		*OBD system general information*		
7.6.2.1.	L3e-L7e [10]	Written description and/or drawing of the malfunction indicator (MI)	:	Refer to drawing No. TEV-36-01
7.6.2.2.	L3e-L7e [10]	List and purpose of all components monitored by the OBD system	:	See table 7.6.2.3.
7.6.2.3.	L3e-L7e [10]	Written description (general working principles) for all OBD stage I circuit (open circuit, shorted low and high, rationality) and electronics (PCU/ECU internal and communication) diagnostics	:	See table 7.6.2.3.
7.6.2.4.	L3e-L7e[10]	Written description (general working principles) for all OBD stage I diagnostic functionality triggering any operating mode which significantly reduces engine torque in case of fault detection	:	See table 7.6.2.3.
7.6.2.5.	L3e-L7e[10]	Written description of the communication protocol(s) supported	:	ISO 9141-2: 1994
7.6.2.6.	L3e-L7e[10]	Physical location of diagnostic-connector (add drawings and photographs)	:	Refer to drawing No. TEV-57-01
7.6.2.7.	L3e-L7e[10]	Written description in case of voluntary compliance with OBD stage II (general working principles)		

Item No.	(Sub) categories	Detailed information		
7.6.2.7.1.	L3e-L7e(10)	Positive-ignition engines		
	L3e-L7e(10)	From 7.6.2.7.1.1. to 7.6.2.7.1.4.	:	Not applicable
7.6.2.7.2.	L3e-L7e(10)	Compression-ignition engines		
	L3e-L7e(10)	From 7.6.2.7.2.1. to 7.6.2.7.2.5.	:	Not applicable
7.6.2.7.3.	L3e-L7e(10)	Criteria for MI activation (fixed number of driving cycles or statistical method)	:	Not applicable
7.6.2.7.4.	L3e-L7e(10)	List of all OBD output codes and formats used (with explanation of each)	:	Not applicable
7.6.3.		*OBD compatibility* *The following additional information shall be provided by the vehicle manufacturer to enable the manufacture of OBD-compatible replacement or service parts, diagnostic tools and test equipment*:		
7.6.3.1.	L3e-L7e(10)	A comprehensive document describing all sensed components concerned with the strategy for fault detection and MI activation (fixed number of driving cycles or statistical method). This shall, include a list of relevant secondary sensed parameters for each component monitored by the OBD system. The document shall also list all OBD output codes and formats (with an explanation of each) used in association with individual emission-related powertrain components and individual non-emission-related components, where monitoring the component is used to determine MI activation. This shall contain, in particular, a comprehensive explanation for the data given in service $05 Test ID $ 21 to FF and the data given in service $06	:	Not applicable
7.6.3.2.	L3e-L7e(10)	For vehicle types using a communication link in accordance with ISO 15765-4 'Road vehicles, diagnostics on controller area network (CAN) — Part 4: requirements for emissions-related systems', the manufacturer shall provide a comprehensive explanation for the data given in service $06 Test ID $00 to FF, for each OBD monitor ID supported	:	Not applicable
7.6.3.3.	L3e-L7e(10)	The information required above may be provided in table form as described below	:	See table 7.6.2.3.
7.6.3.4.	L3e-L7e(10)	Description of ETC diagnostic fault codes	:	Not applicable

Item No.	(Sub) categories	Detailed information		
7.6.3.5.	L3e-L7e(10)	Description of the default modes which a driver may experience in case of an ETC failure	:	Not applicable
7.6.4.		*Communication protocol information* *The following information shall be referenced to a specific vehicle make, model and variant, or identified using other workable definitions such as VIN or vehicle and systems identification*		
7.6.4.1.	L3e-L7e(10)	Any protocol information system needed to enable complete diagnostics in addition to the standards prescribed in point 3.8. of Appendix 1 to Annex XII to Commission Delegated Regulation (EU) No 44/2014, such as additional hardware or software protocol information, parameter identification, transfer functions, 'keep alive' requirements, or error conditions	:	Not applicable
7.6.4.2.	L3e-L7e(10)	Details of how to obtain and interpret all fault codes not in accordance with the standards prescribed in point 3.11. of Appendix 1 to Annex XII to Commission Delegated Regulation (EU) No 44/2014	:	Not applicable
7.6.4.3.	L3e-L7e(10)	A list of all available live data parameters including scaling and access information	:	See table 7.6.4.3.
7.6.4.4.	L3e-L7e(10)	A list of all available functional tests including device activation or control and the means to implement them	:	Not applicable
7.6.4.5.	L3e-L7e(10)	Details of how to obtain all component and status information, time stamps, pending DTC and freeze frames	:	According to ISO 15031-4: 2005
7.6.4.6.	L3e-L7e(10)	~~PCU~~/ECU identification and variant coding	:	Identification No.: TEV CVN: 00000001
7.6.4.7.	L3e-L7e(10)	Details of how to reset service lights	:	According to ISO 15031-5: 2011 Service $04
7.6.4.8.	L3e-L7e(10)	Location of diagnostic connector and connector details	:	Refer to drawing No. TEV-57-01
7.6.4.9.	L3e-L7e(10)	Engine code identification	:	See item 3.1.2.2.
7.6.5.		*Test and diagnosis of OBD monitored components*		
7.6.5.1.	L3e-L7e(10)	A description of tests to confirm its functionality, at the component or in the harness	:	Not applicable
7.7.		Passenger handholds and footrests		
7.7.1.		*Handholds*		
7.7.1.1.	L1e-L7e	Configuration	:	~~strap and/or handle~~ (4)

Item No.	(Sub) categories	Detailed information		
7.7.1.2.	L1e-L7e	Photographs and/or drawings showing the location and the construction	:	Not applicable
7.7.2.		*Footrests*		
7.7.2.1.	L1e-L7e	Photographs and/or drawings showing the location and the construction	:	Refer to drawing No. TEV-54-01
7.8.		Registration plate space		
7.8.1.	L1e-L7e	Location of rear registration plate (indicate variants where necessary; drawings may be used as appropriate)	:	Refer to drawing No. TEV-55-01
7.8.1.1.	L1e-L7e	Height above road surface, upper edge	:	Refer to drawing No. TEV-55-01
7.8.1.2.	L1e-L7e	Height above road surface, lower edge	:	Refer to drawing No. TEV-55-01
7.8.1.3.	L1e-L7e	Distance of the centre line from the longitudinal median plane of the vehicle	:	0 mm
7.8.1.4.	L1e-L7e	Dimensions (length x width)	:	Refer to drawing No. TEV-55-01
7.8.1.5.	L1e-L7e	Inclination of the plane to the vertical	:	Refer to drawing No. TEV-55-01
7.8.1.6.	L1e-L7e	Angle of visibility in the horizontal plane	:	30 degrees and above
7.9.		Stands		
	L1e, L3e	From 7.9.1. to 7.9.4.	:	Not applicable

Table 6.9.4.

Controls, tell-tales and indicators for which, when fitted, identification is mandatory, and symbols to be used for that purpose							
Symbol No	Device	Control/ indicator available (+)	Identified by symbol (+)	Where (++)	Tell-tale available (+)	Identified by symbol (+)	Where (++)
1	Master light	x	x	d	-	-	-
2	Dipped-beam head lamps	x	x	d	-	-	-
3	Main-beam head lamps	x	x	d	x	x	d
4	Position (side) lamps	-	-	-	x	x	d
5	Front fog lamps	-	-	-	-	-	-
6	Rear fog lamps	-	-	-	-	-	-
7	Headlamp levelling device	-	-	-	-	-	-
8	Parking lamps	-	-	-	-	-	-
9	Direction indicators	x	x	d	x	x	d
10	Hazard warning	x	x	d	x	x	d
11	Windscreen wiper	x	x	d	-	-	-
12	Windscreen washer	-	-	-	-	-	-
13	Windscreen wiper and washer	x	x	d	-	-	-
14	Headlamp cleaning device	-	-	-	-	-	-
15	Windscreen demisting and defrosting	-	-	-	-	-	-
16	Rear window demisting and defrosting	-	-	-	-	-	-
17	Ventilating fan	x	x	d	-	-	-
18	Diesel pre-heat	-	-	-	-	-	-
19	Choke	-	-	-	-	-	-
20	Brake failure	-	-	-	x	x	d
21	Fuel level	-	-	-	-	-	-
22	Battery charging condition	-	-	-	x	x	d
23	Engine coolant temperature	-	-	-	-	-	-
24	Malfunction indicator light (MI)	-	-	-	x	x	d
25	Anti-lock brake system malfunction	-	-	-	x	x	d

(+) x = Yes.
- = No or not separately available.
o = Optional.
(++) d = Directly on control, indicator or tell-tale.
c = In close vicinity.

Table 6.9.5.

Controls, tell-tales and indicators for which, when fitted, identification is optional, and symbols which shall be used if they are to be identified							
Symbol No	Device	Control/ indicator available (+)	Identified by symbol (+)	Where (++)	Tell-tale available (+)	Identified by symbol (+)	Where (++)
1	Parking brake	x	x	d	x	x	d
2	Rear window wiper	-	-	-	-	-	-
3	Rear window washer	-	-	-	-	-	-
4	Rear window wiper and washer	-	-	-	-	-	-
5	Intermittent windscreen wiper	-	-	-	-	-	-
6	Audible warning device (horn)	x	x	d	-	-	-
7	Front hood (bonnet)	-	-	-	-	-	-
8	Rear hood (boot)	-	-	-	-	-	-
9	Seat belt	-	-	-	x	x	d
10	Engine oil pressure	-	-	-	-	-	-
11	Unleaded petrol	-	-	-	-	-	-
12	Engine start	-	-	-	-	-	-
13	Engine shut-off	-	-	-	-	-	-
14	Ready	-	-	-	x	x	d
15	R (Reverse)	x	x	c	x	x	d
16	N (Neutral)	x	x	c	x	x	d
17	D (Drive)	x	x	c	x	x	d
18	Leave seat	-	-	-	x	x	d
19	High temperature of power battery	-	-	-	x	x	d
20	Propulsion battery failure	-	-	-	x	x	d
21	State of charge propulsion battery	-	-	-	x	x	d
22	Steering failure	-	-	-	x	x	d
23	Limited performance mode	-	-	-	x	x	d
24	Door(s) ajar	-	-	-	x	x	d
25	Vehicle system failure	-	-	-	x	x	d
26	Motor & controller overheating	-	-	-	x	x	d
27	Ammeter	-	-	-	x	x	d
28	Charging socket location and remaining mileage	-	-	-	x	x	d
29	Bluetooth	-	-	-	x	x	d
30	Air-conditioning system	x	x	d	-	-	-
31	Interior heating	x	x	d	-	-	-
32	Door lock control	x	x	d	-	-	-
33	Driving mode	x	x	d	x	x	d
34	USB port	x	x	d	-	-	-
35	Window lift, power-operated	x	x	d	-	-	-

(+) x = Yes.
- = No or not separately available.
o = Optional.
(++) d = Directly on control, indicator or tell-tale.
c = In close vicinity.

Table 7.6.2.3.

Components	Fault code	Monitor strategy	Fault detection criteria	MI activation criteria	Secondary parameters	Pre-conditioning	Demonstration test
Throttle	P0120	Accelerator(Pedal) position sensor open circuit	Consumption = 0 A	/	/	N.A.	One type I
	P0122	Accelerator(Pedal) position sensor circuit low	Accelerator(Pedal) signal level less than 1% of the range	/	/	N.A.	One type I
	P0123	Accelerator(Pedal) position sensor circuit high	Accelerator(Pedal) signal level more than 99% of the range	/	/	N.A.	One type I
Drive motor control module	U0110	Lost communication with drive motor control module	Time without receptions > 1 s	/	/	N.A.	One type I
Drive motor temperature	P0A2C	Drive motor temperature sensor circuit low	Sensor signal level less than 1% of the range	/	/	N.A.	One type I
	P0A2D	Drive motor temperature sensor circuit high	Sensor signal level more than 99% of the range	/	/	N.A.	One type I
System voltage	P0562	System voltage low	Main supply under voltage	/	/	N.A.	One type I
	P0563	System voltage high	Main supply over voltage	/	/	N.A.	One type I

Table 7.6.4.3.

PID	Description	Min. value	Max. value	Units
01	Monitor status since DTCs cleared	/	/	/
02	Freeze DTC	/	/	/
04	Calculated load	0	100	%
05	Motor temperature	-40	215	ºC
0C	Motor rpm	0	Variant 00: 7600 Variant 01: 7900	rpm
11	Accelerator(Pedal) position	0	100	%
21	Distance travelled with malfunction indicator lamp(MIL) on	0	65,535	km
42	Control module voltage	0	65.535	V

LIST OF DRAWINGS

Drawing No.	Drawing description
TEV-01-01	Location of manufacturer's statutory plate
TEV-01-02	Detail of manufacturer's statutory plate
TEV-02-01	Location of the vehicle identification number
TEV-02-02	Detail of the vehicle identification number
TEV-03-01	Complete vehicle (1)
TEV-03-02	Complete vehicle (2)
TEV-03-03	Complete vehicle (3)
TEV-04-01	Chassis
TEV-05-01	Position and arrangement of electric motor (1)
TEV-05-02	Position and arrangement of electric motor (2)
TEV-06-01	Position and arrangement of electric motor control unit (1)
TEV-06-02	Position and arrangement of electric motor control unit (2)
TEV-07-01	Control system of pure propulsion
TEV-08-01	Position and detail of propulsion battery
TEV-09-01	Vehicle drive-train and its control system
TEV-10-01	Transmission system (1)
TEV-10-02	Transmission system (2)
TEV-11-01	Safe-cornering device
TEV-12-01	Suspension arrangements
TEV-12-02	Front suspension
TEV-12-03	Rear suspension
TEV-13-01	Air-conditioning system
TEV-14-01	Main components of air-conditioning system
TEV-15-01	Locations and detail of the audible warning device
TEV-16-01	Braking system
TEV-17-01	Hydraulic reservoir
TEV-18-01	Brake hose
TEV-19-01	Front brake details
TEV-20-01	Rear brake details
TEV-21-01	Front brake pads assy
TEV-22-01	Rear brake pads assy
TEV-23-01	Parking brake handle
TEV-24-01	Service brake pedal
TEV-25-01	ABS schematic diagram
TEV-25-02	Hydraulic electronic control unit
TEV-26-01	Location of power circuit components
TEV-27-01	Electrical circuit diagram
TEV-28-01	Location of high voltage label
TEV-29-01	Fuse
TEV-30-01	Power wiring harness
TEV-31-01	Front protective structure
TEV-31-02	Rear protective structure
TEV-32-01	The windscreen and other glasses
TEV-32-02	The windscreen glass

TEV-33-01	Detail of the window lifting mechanism
TEV-34-01	Windscreen wiper
TEV-35-01	Windscreen washer
TEV-36-01	Controls I.D., tell-tales and indicators
TEV-37-01	Complete speedometer system
TEV-38-01	List of lighting and light-signalling devices
TEV-39-01	Lighting installation
TEV-40-01	Rear-view mirror position
TEV-41-01	Rear-view mirror installation
TEV-42-01	Safety belt anchorages
TEV-43-01	Location and arrangement of seating position
TEV-44-01	Details of seat and head restraint
TEV-45-01	R-point of all seats
TEV-46-01	Steering geometry
TEV-47-01	Doors
TEV-48-01	Latches
TEV-49-01	Hinges
TEV-50-01	Details of entrances, steps and handles
TEV-51-01	View of the interior fittings
TEV-52-01	Protective device
TEV-53-01	External projections (1)
TEV-53-02	External projections (2)
TEV-53-03	External projections (3)
TEV-54-01	Construction and location of footrest
TEV-55-01	Mounting space for registration plate
TEV-56-01	Location and detail of charging interface
TEV-57-01	Location and detail of diagnostic connector
TEV-58-01	Load platform of basic configuration
TEV-58-02-01	Small load platform
TEV-58-02-01	Details of small load platform
TEV-58-03-01	Big load platform
TEV-58-03-02	Details of big load platform
TEV-59-01	Shape of rim

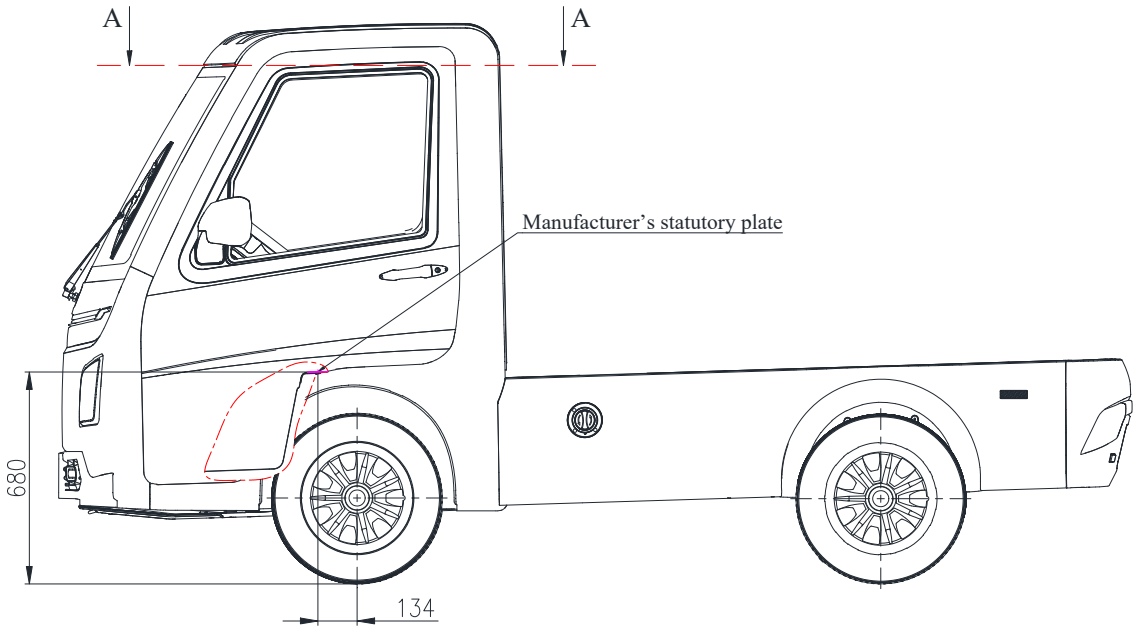

A-A
1:1

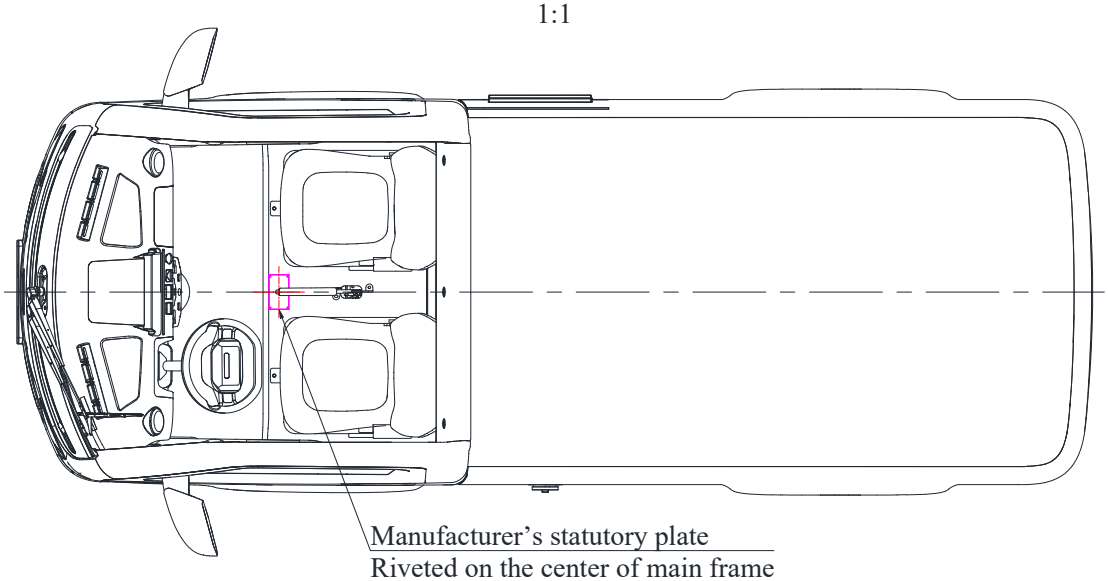

Manufacturer's statutory plate
Riveted on the center of main frame
C, x -134, y 0, z 680

-C: center of the vehicle
-x: horizontal distance (in mm) from the front-most axle (preceded by '-' (i.e. minus) if located in front of the front axle)
-y: horizontal distance (in mm) from the longitudinal centre line of the vehicle
-z: distance (in mm) from the ground

Vehicle Type	TEV
Location of manufacturer's statutory plate	
Drawing No.	TEV-01-01

Variant 00:

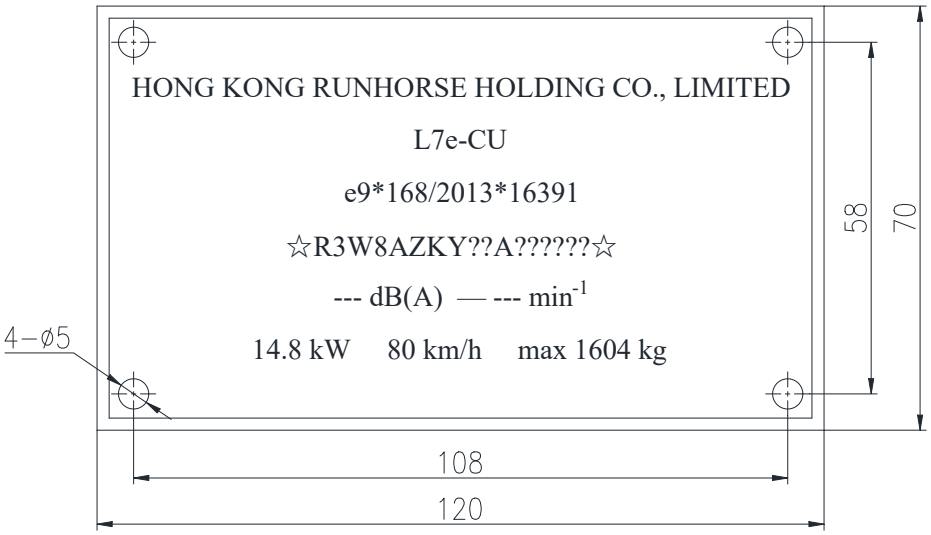

Text height: 4 mm

Variant 01:

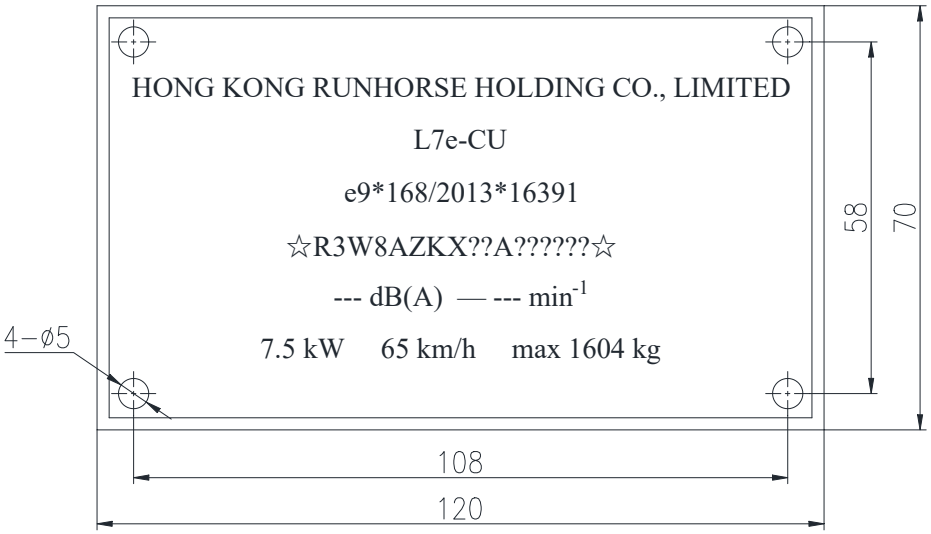

Text height: 4 mm

Vehicle Type	TEV
Detail of manufacturer's statutory plate	
Drawing No.	TEV-01-02

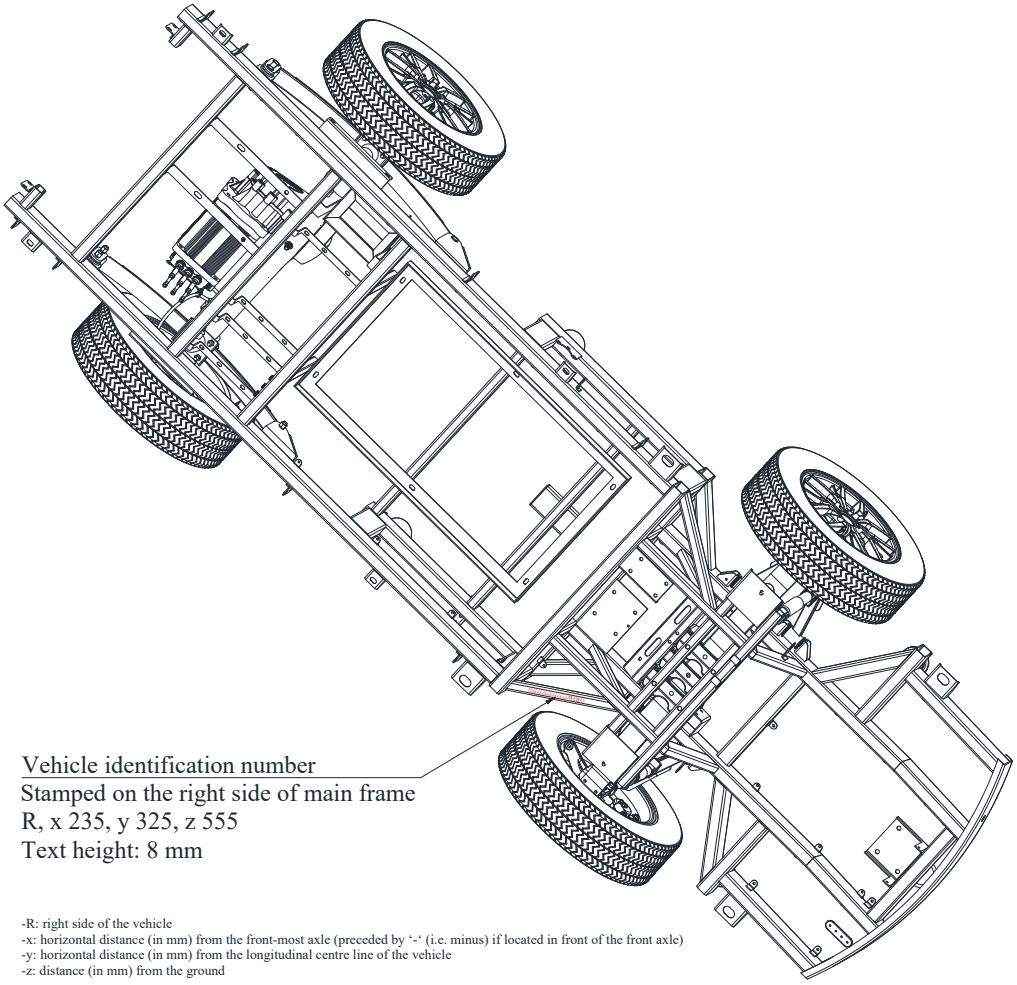

Vehicle identification number
Stamped on the right side of main frame
R, x 235, y 325, z 555
Text height: 8 mm

-R: right side of the vehicle
-x: horizontal distance (in mm) from the front-most axle (preceded by '-' (i.e. minus) if located in front of the front axle)
-y: horizontal distance (in mm) from the longitudinal centre line of the vehicle
-z: distance (in mm) from the ground

Vehicle Type	TEV
Location of the vehicle identification number	
Drawing No.	TEV-02-01

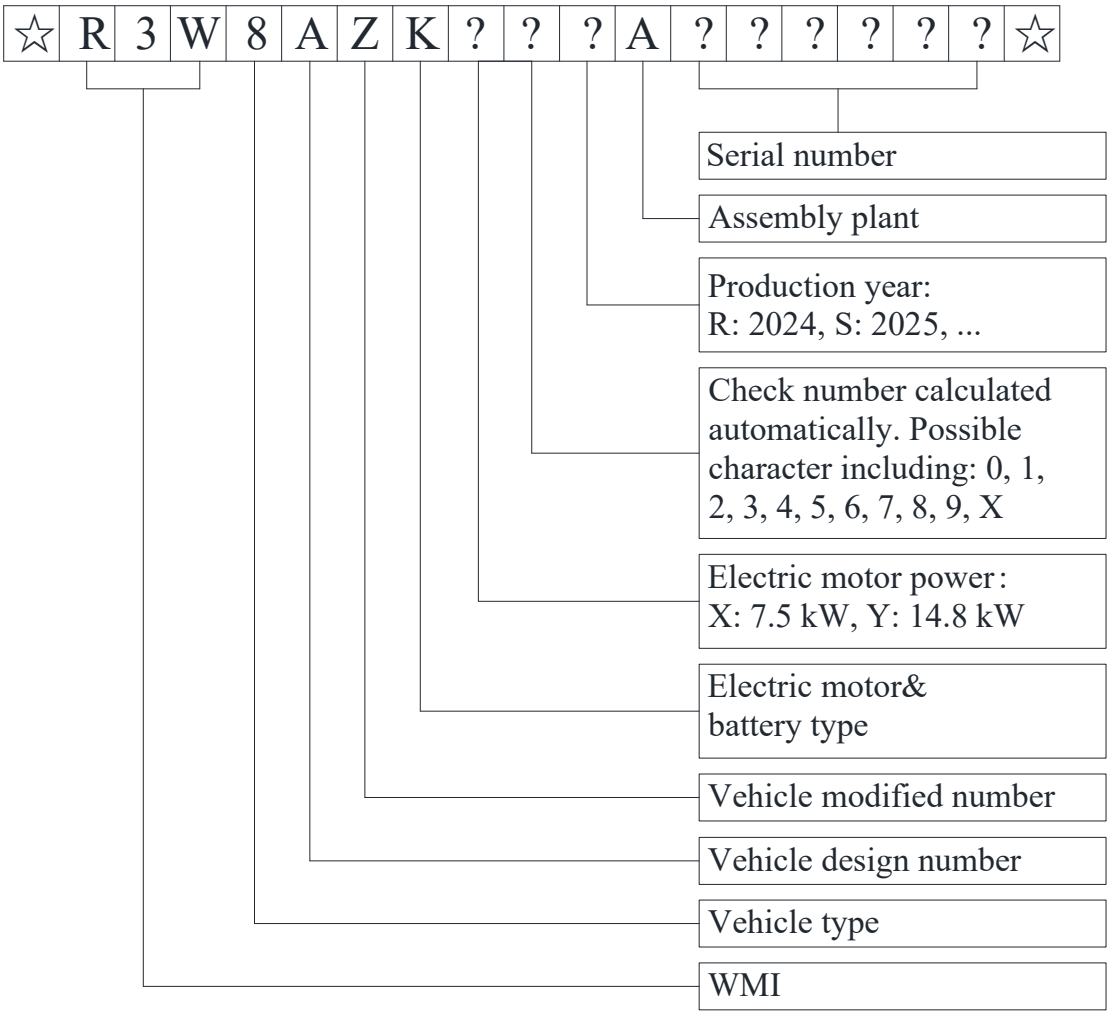

State	VIN
TEV/00/00	☆R3W8AZKY??A??????☆
TEV/00/01	
TEV/00/02	
TEV/01/00	☆R3W8AZKX??A??????☆
TEV/01/01	
TEV/01/02	

Vehicle Type	TEV
Detail of the vehicle identification number	
Drawing No.	TEV-02-02

For Version 00, with basic configuration

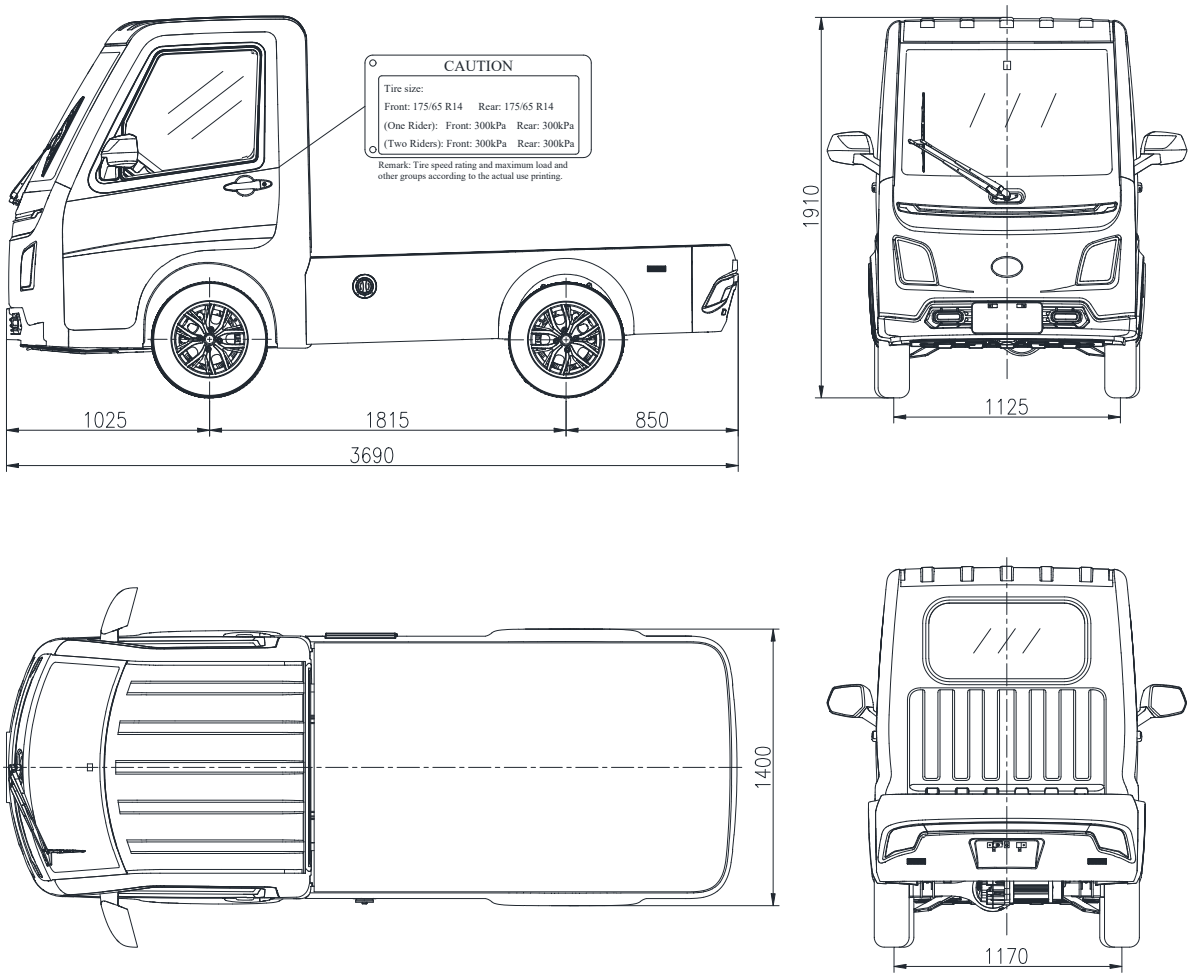

Vehicle Type	TEV
Complete vehicle (1)	
Drawing No.	TEV-03-01

For Version 01, with small load platform

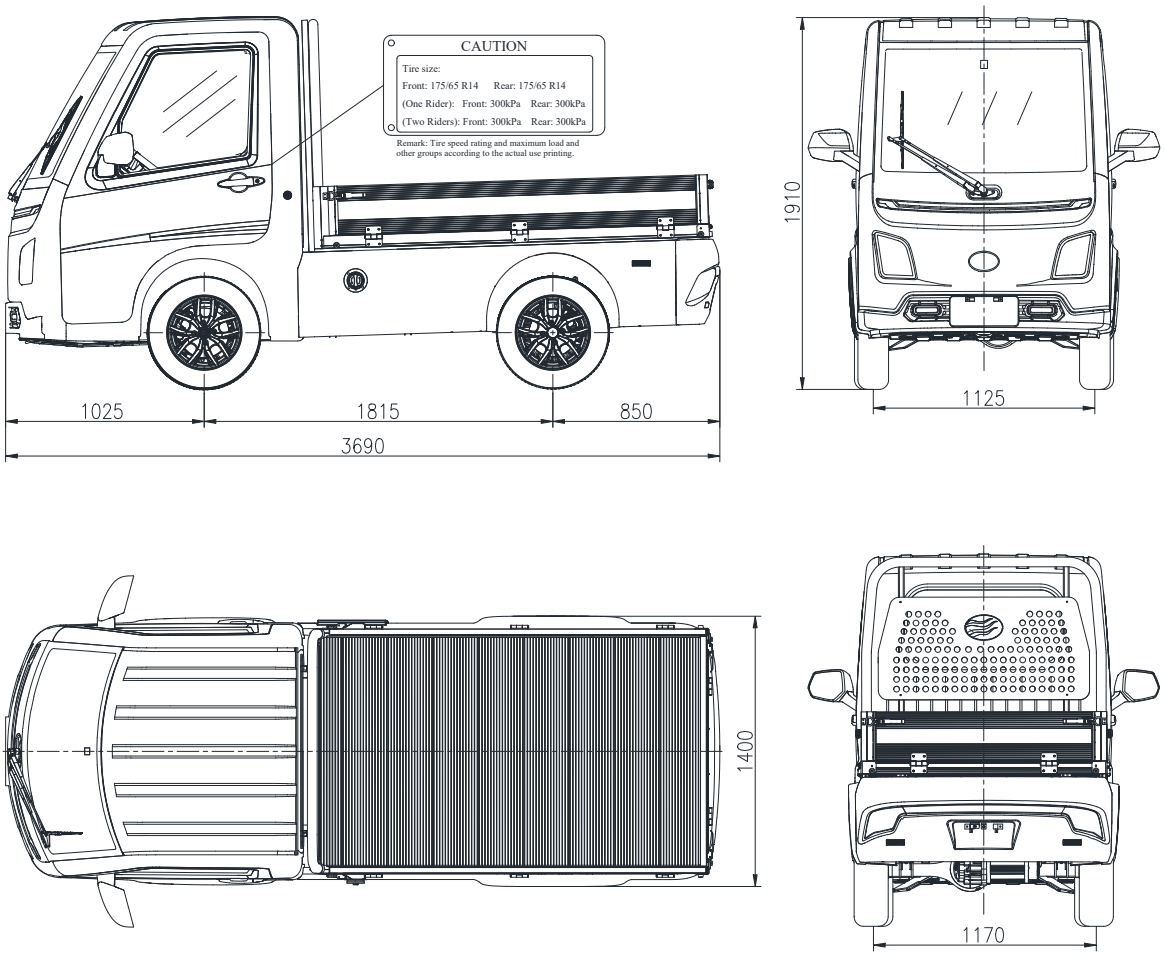

Vehicle Type	TEV
Complete vehicle (2)	
Drawing No.	TEV-03-02

For Version 02, with big load platform

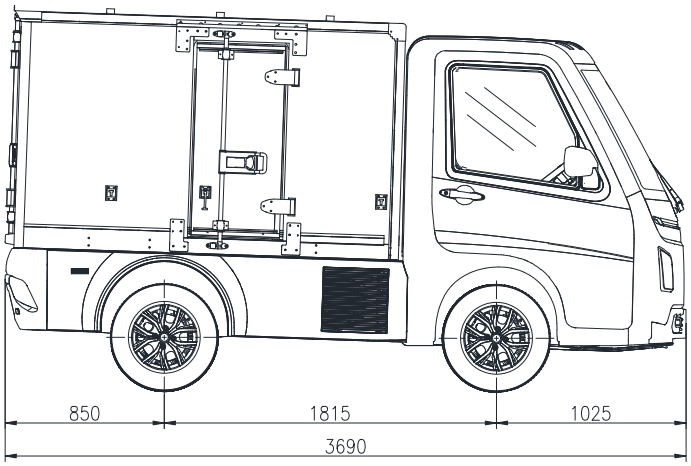

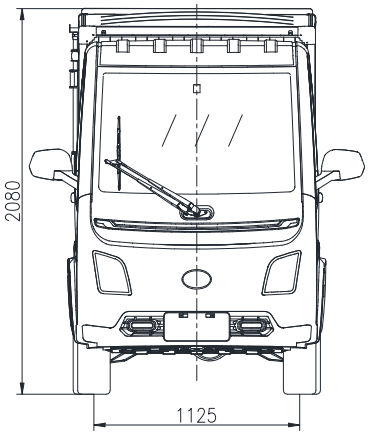

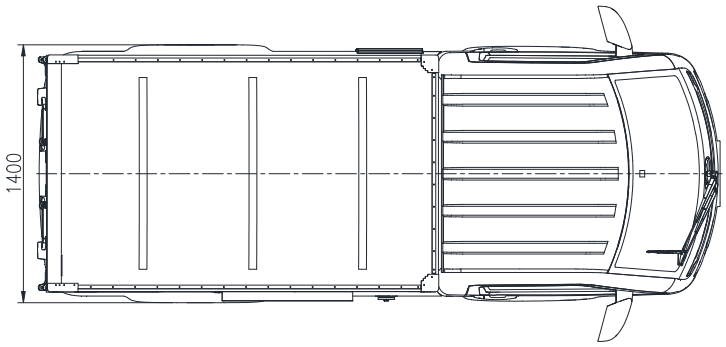

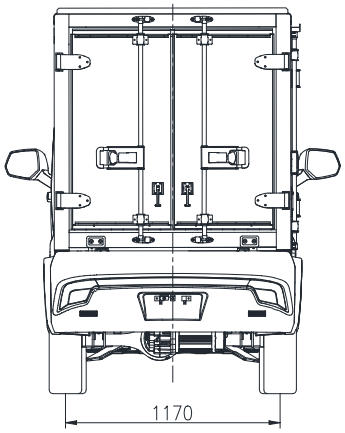

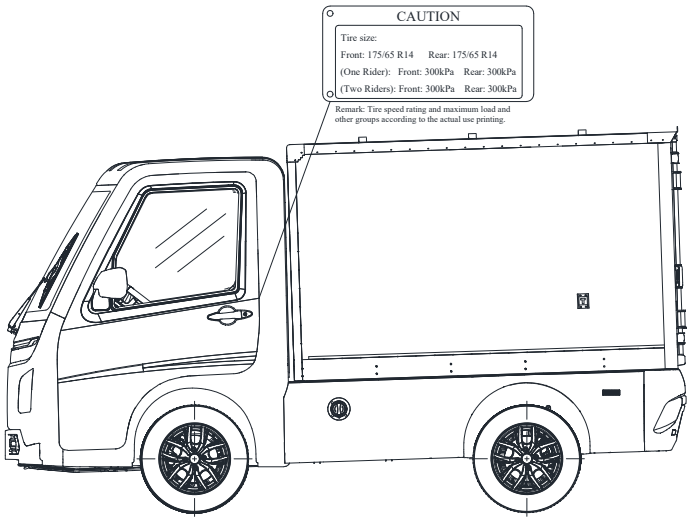

Vehicle Type	TEV
Complete vehicle (3)	
Drawing No.	TEV-03-03

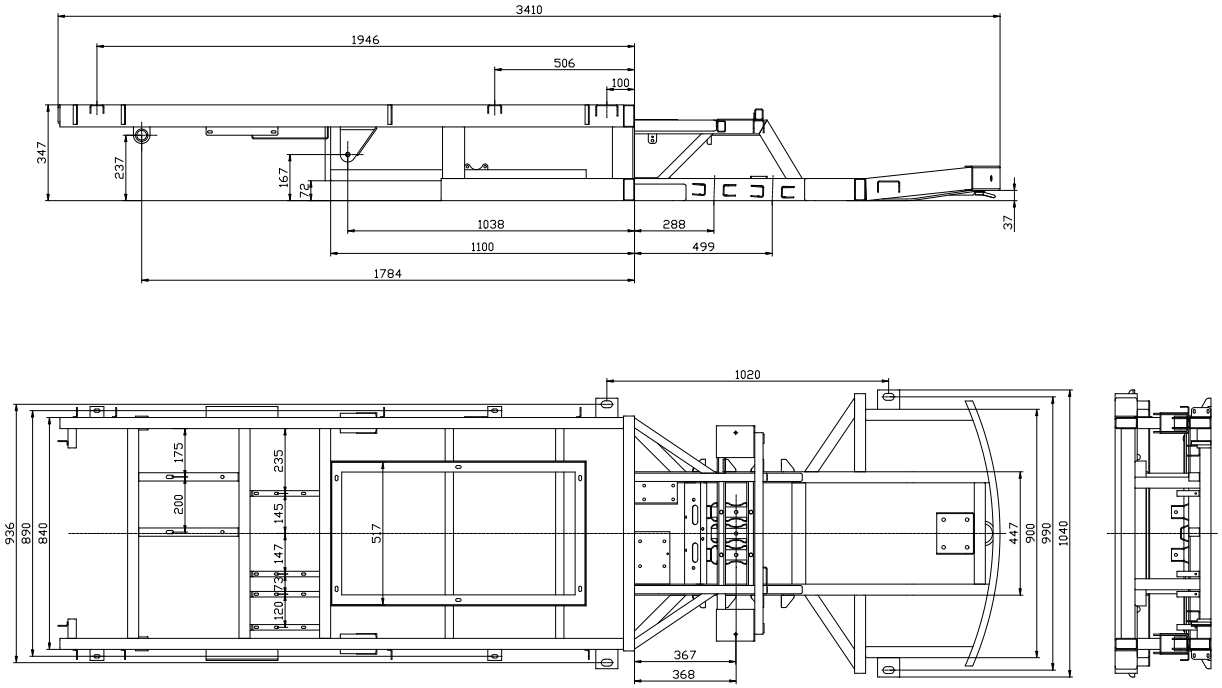

Vehicle Type	TEV
Chassis	
Drawing No.	TEV-04-01

For Variant 00:

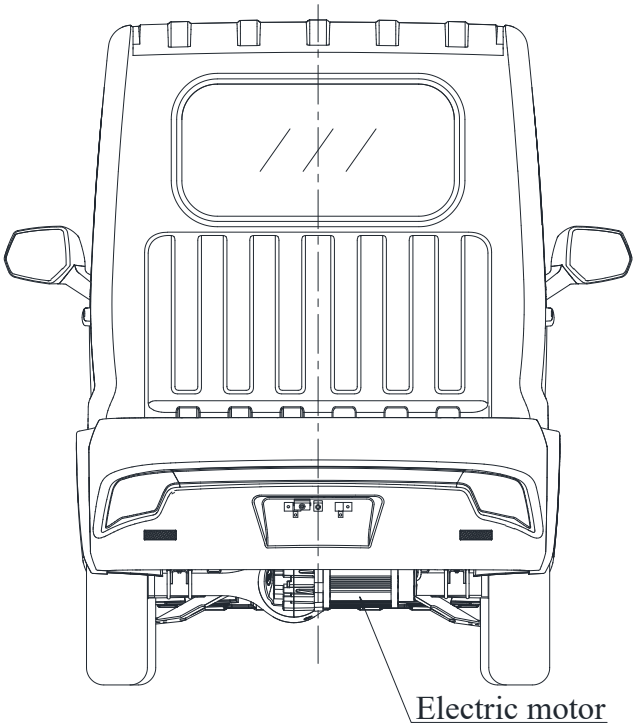

Detail:

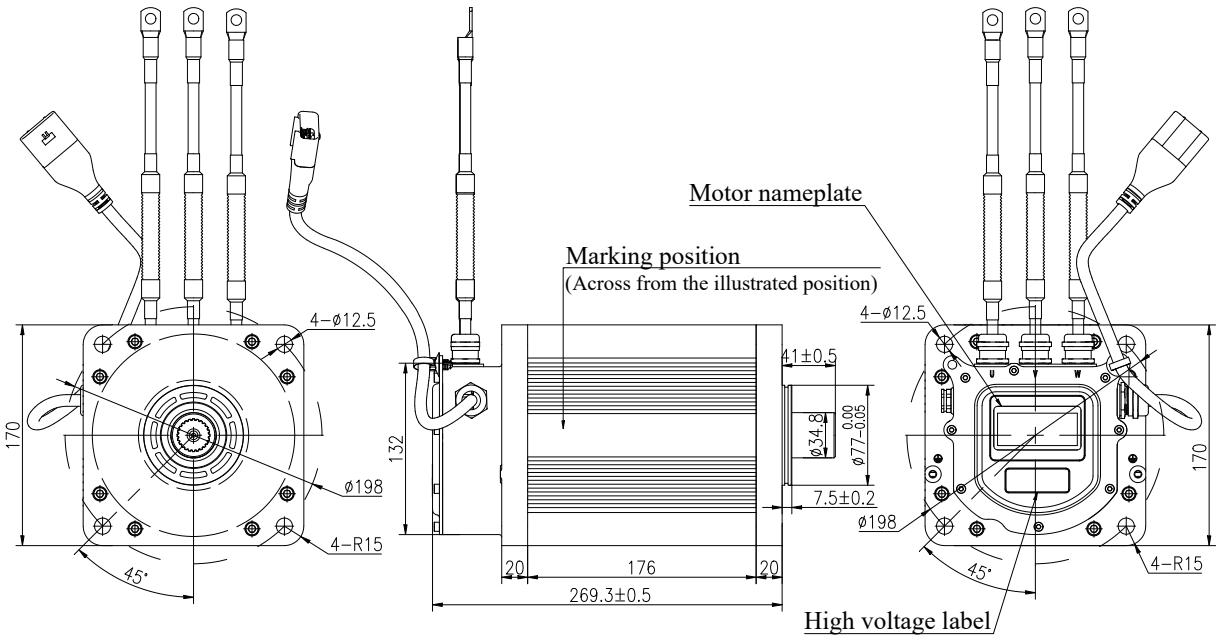

Manufacturer: Xuzhou Rock Drive Electric Technology Co., Ltd
Make: ROCK
Type & Marking: TZ155XPS110B

Vehicle Type	TEV
Position and arrangement of electric motor (1)	
Drawing No.	TEV-05-01

For Variant 01:

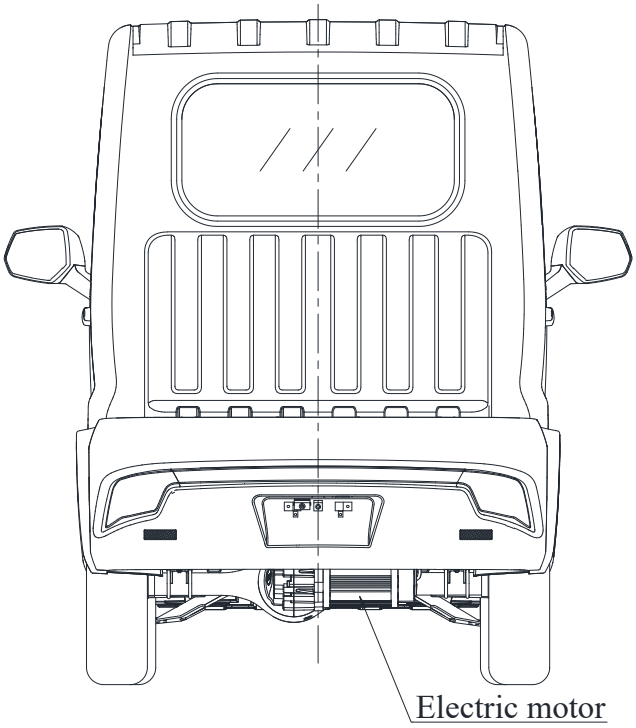

Detail:

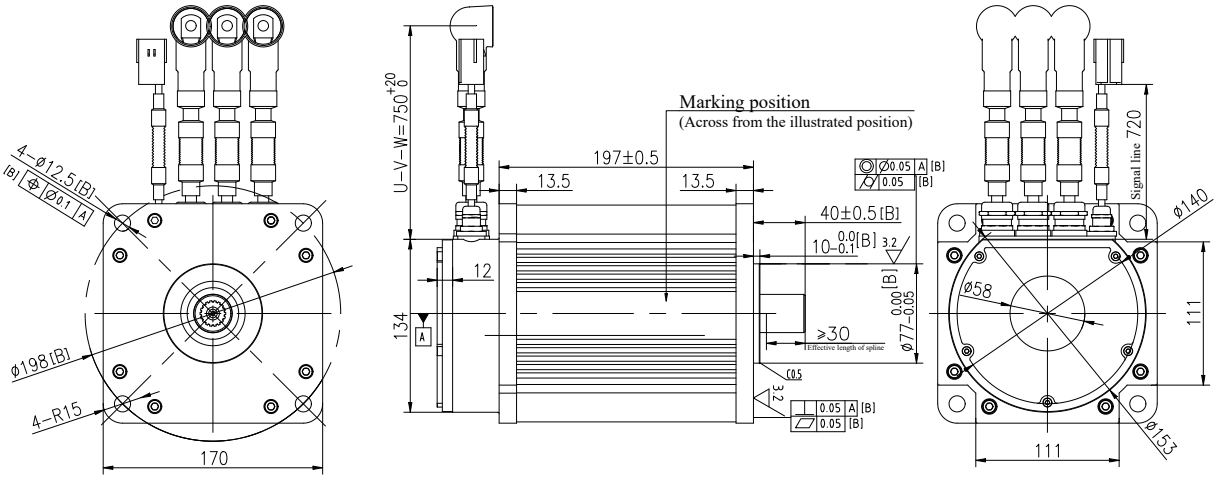

Manufacturer: Xuzhou Rock Drive Electric Technology Co., Ltd
Make: ROCK
Type & Marking: TZ155MPS092

Vehicle Type	TEV
Position and arrangement of electric motor (2)	
Drawing No.	TEV-05-02

For Variant 00:

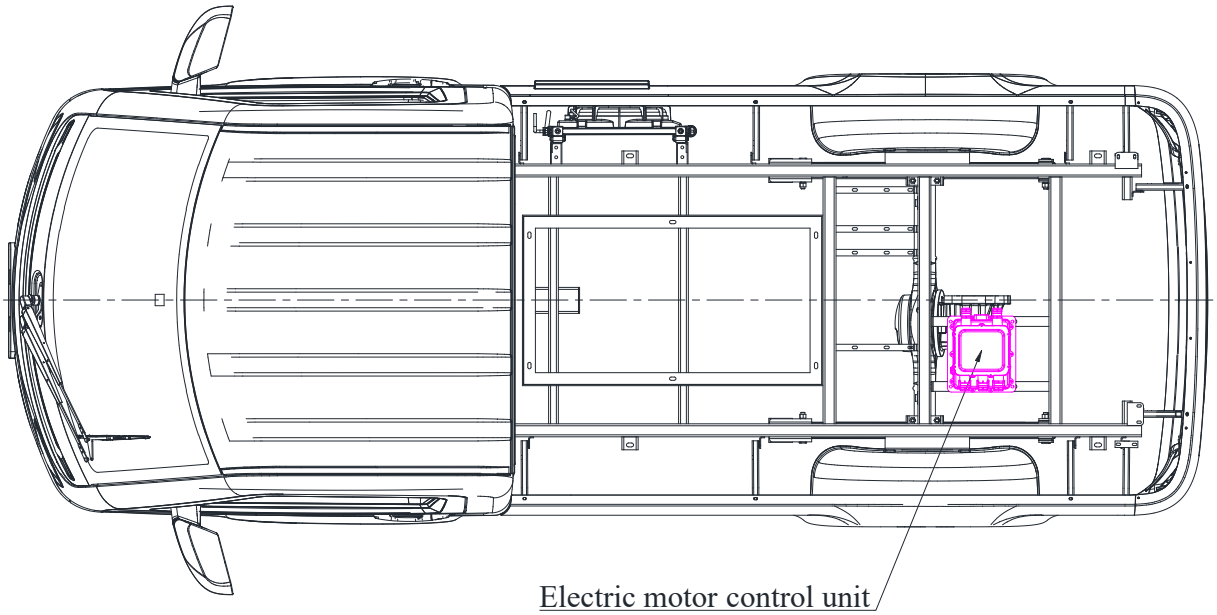

Detail:

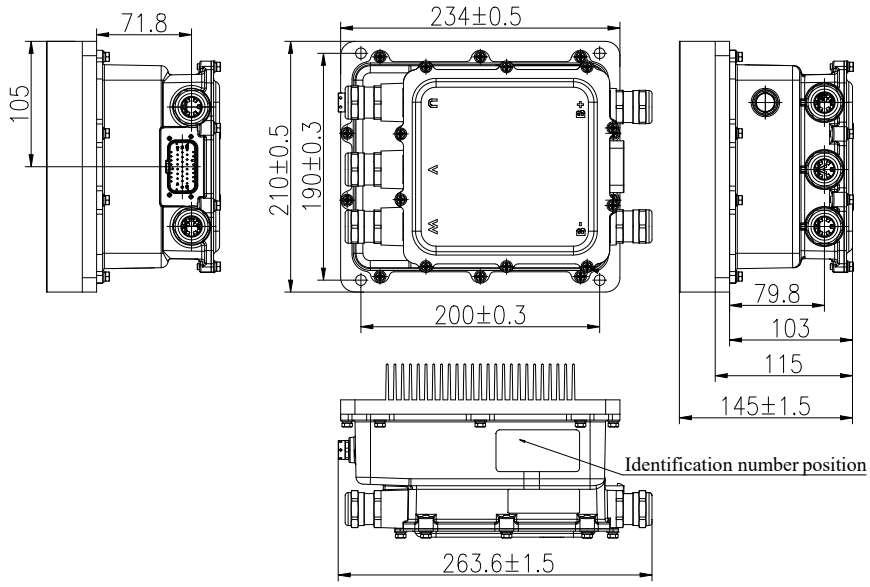

Manufacturer: Xuzhou Rock Drive Electric Technology Co., Ltd
Make: ROCK
Type & Identification number: KTZ09X40PS1048

Vehicle Type	TEV
Position and arrangement of electric motor control unit (1)	
Drawing No.	TEV-06-01

For Variant 01:

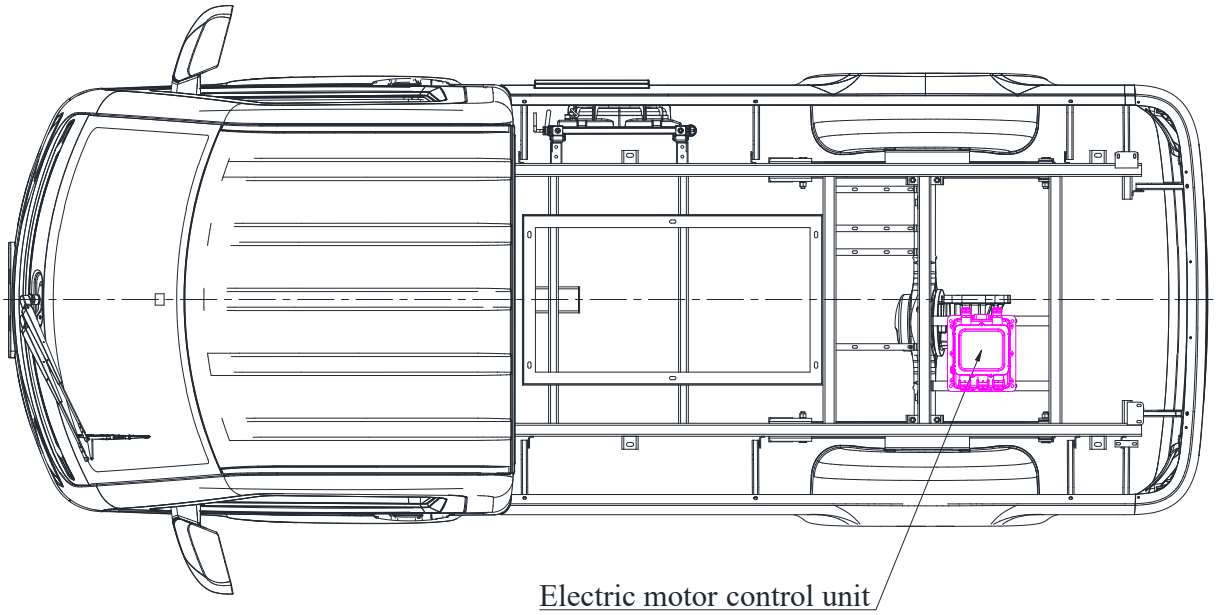

Detail:

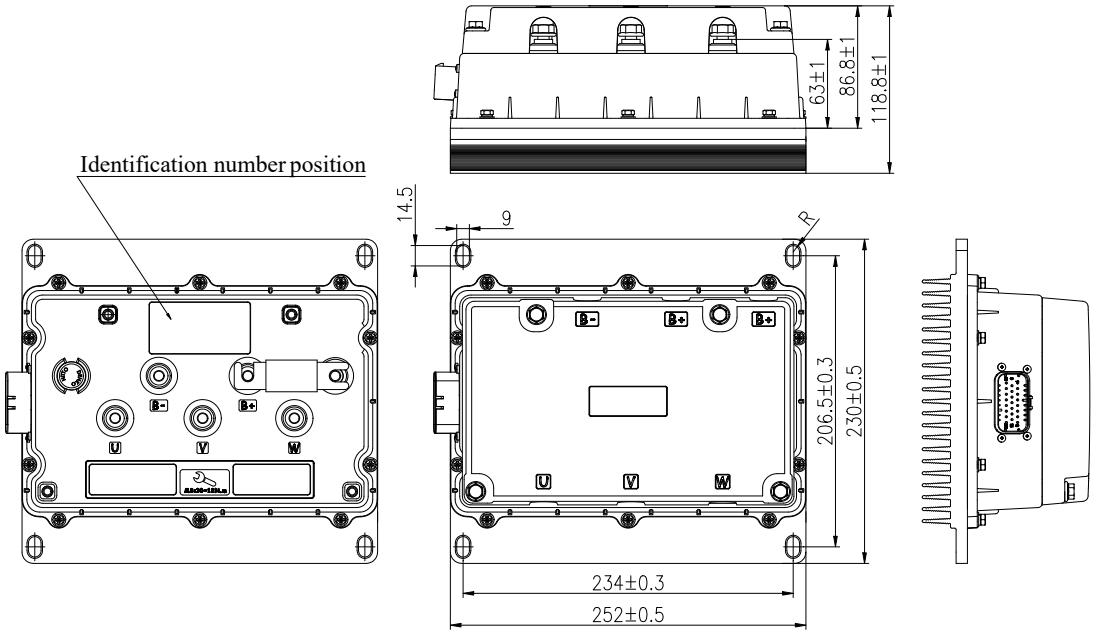

Manufacturer: Xuzhou Rock Drive Electric Technology Co., Ltd
Make: ROCK
Type & Identification number: KTZ09M45PS560

Vehicle Type	TEV
Position and arrangement of electric motor control unit (2)	
Drawing No.	TEV-06-02

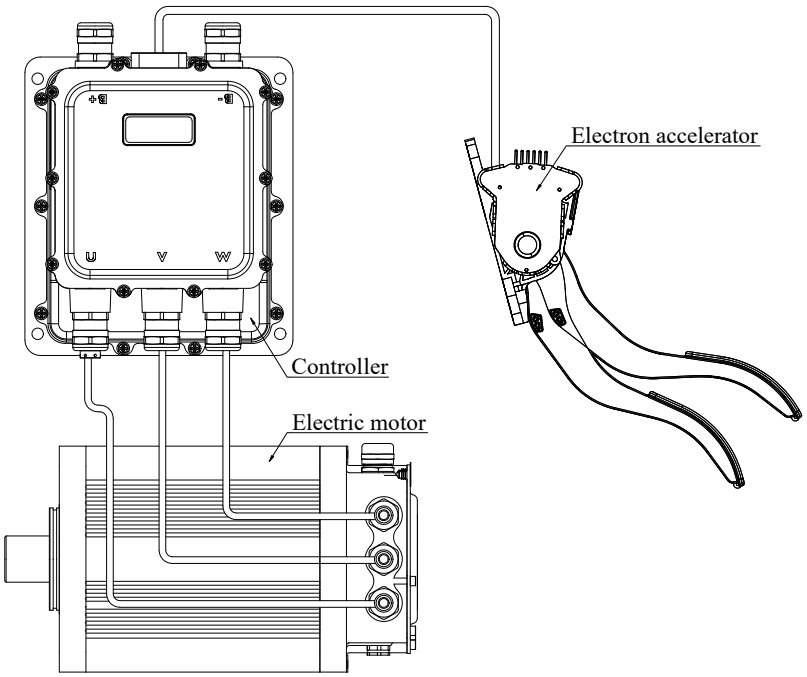

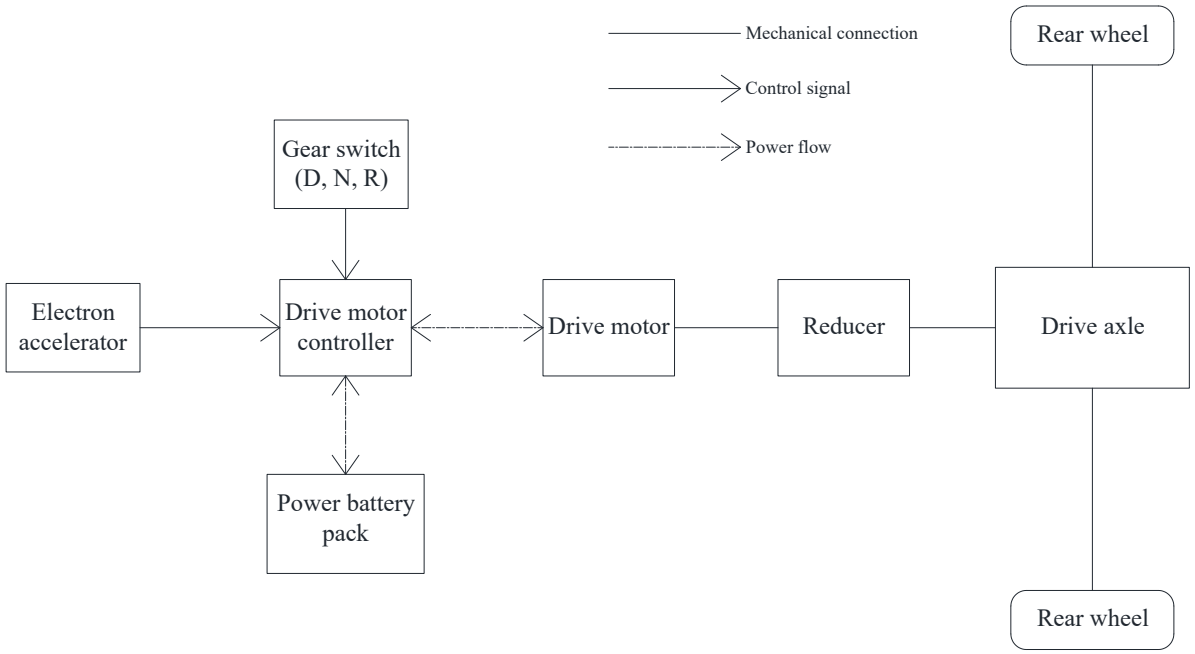

Vehicle Type	TEV
Control system of pure propulsion	
Drawing No.	TEV-07-01

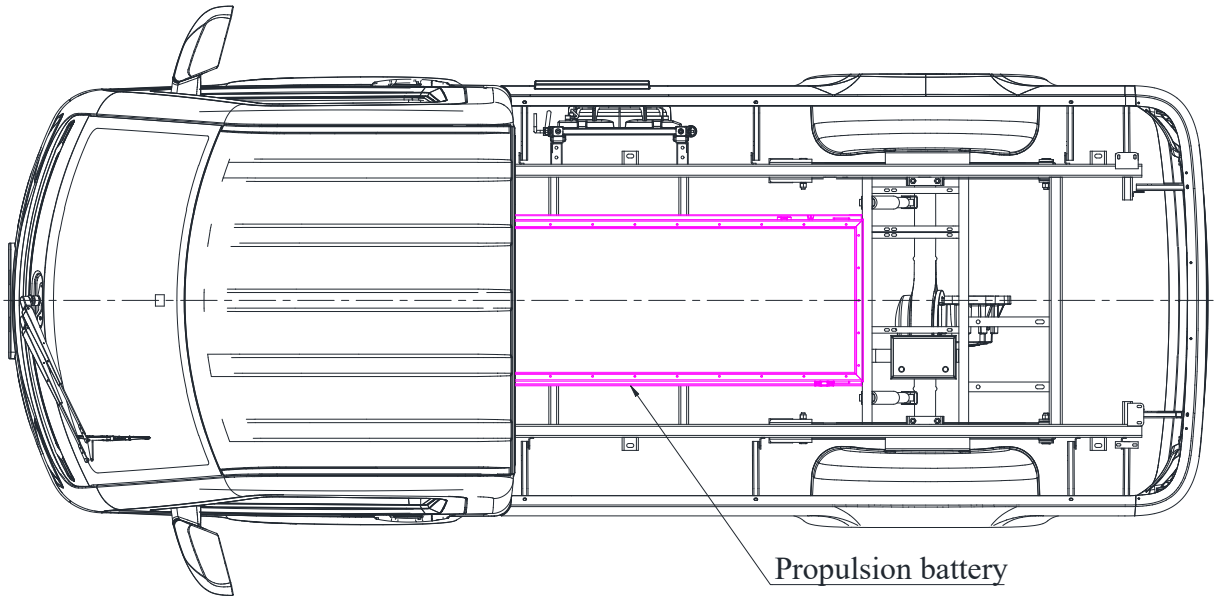

Detail:

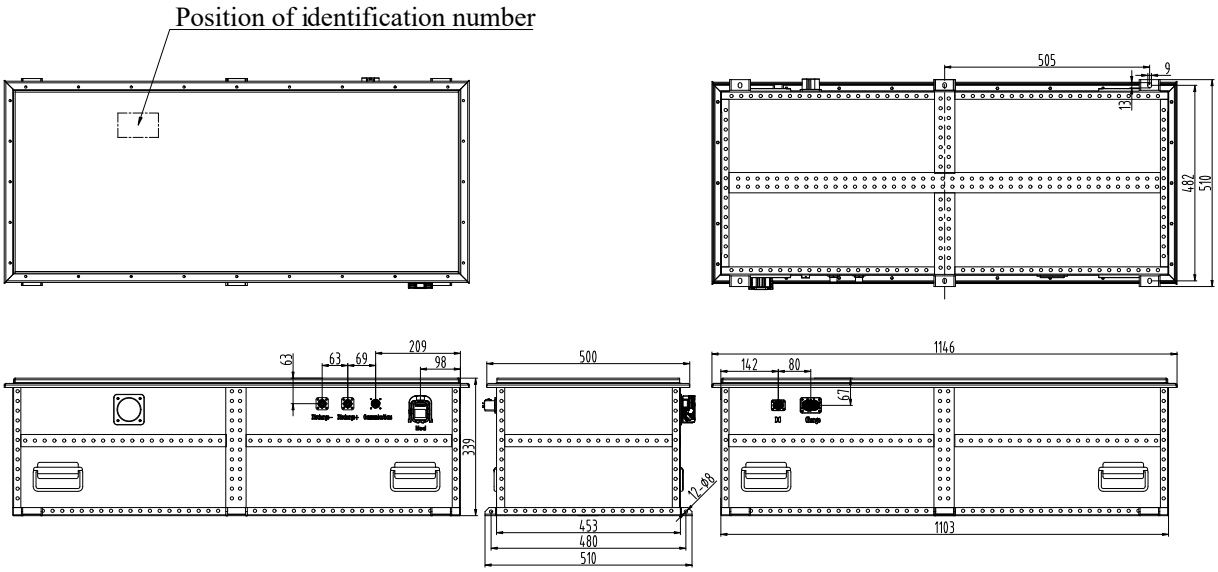

State	Identification number
TEV/00/00	JM-2216040
TEV/00/01	
TEV/00/02	
TEV/01/00	JM-2216050
TEV/01/01	
TEV/01/02	

Vehicle Type	TEV
Position and detail of propulsion battery	
Drawing No.	TEV-08-01

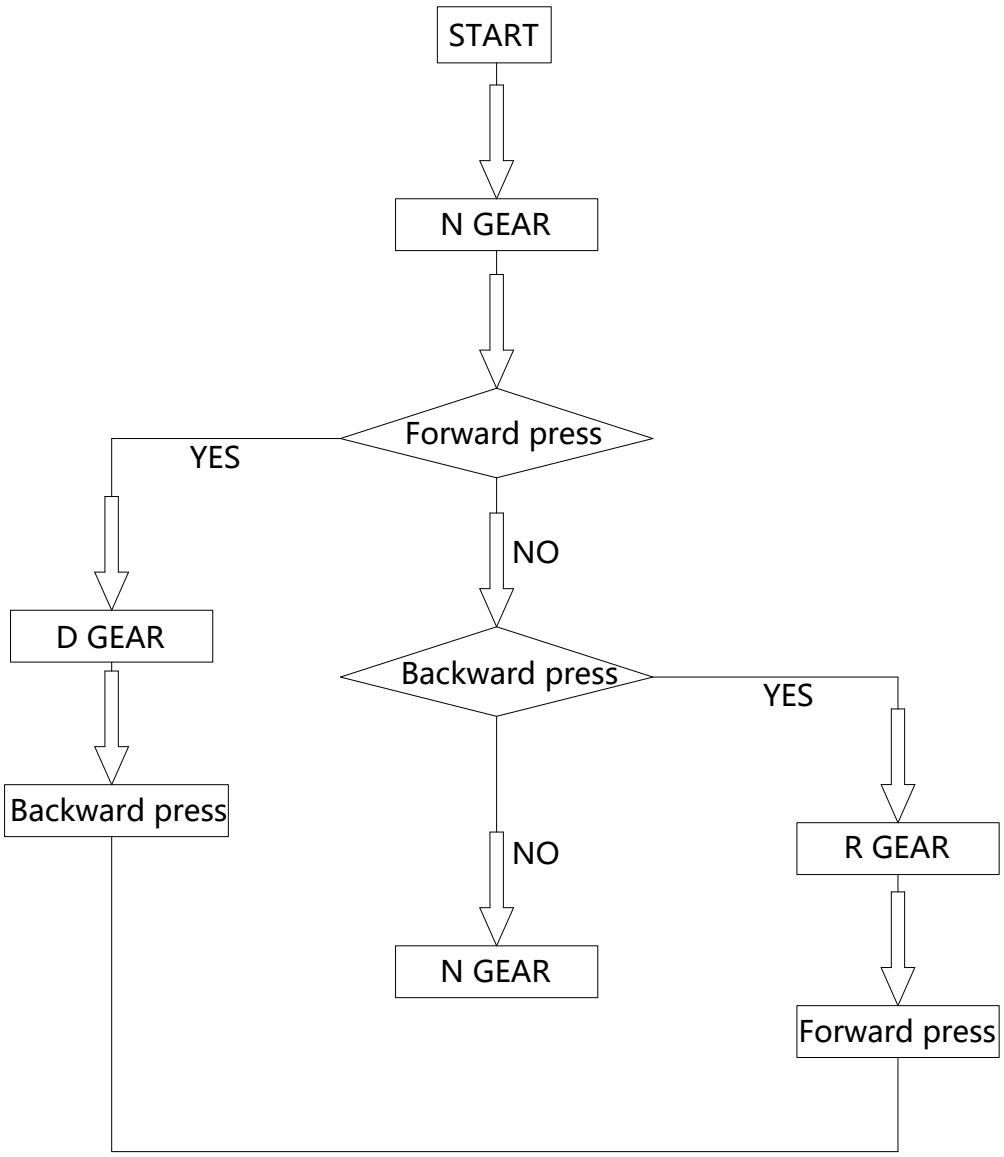

Vehicle Type	TEV
Vehicle drive-train and its control system	
Drawing No.	TEV-09-01

For Variant 00:

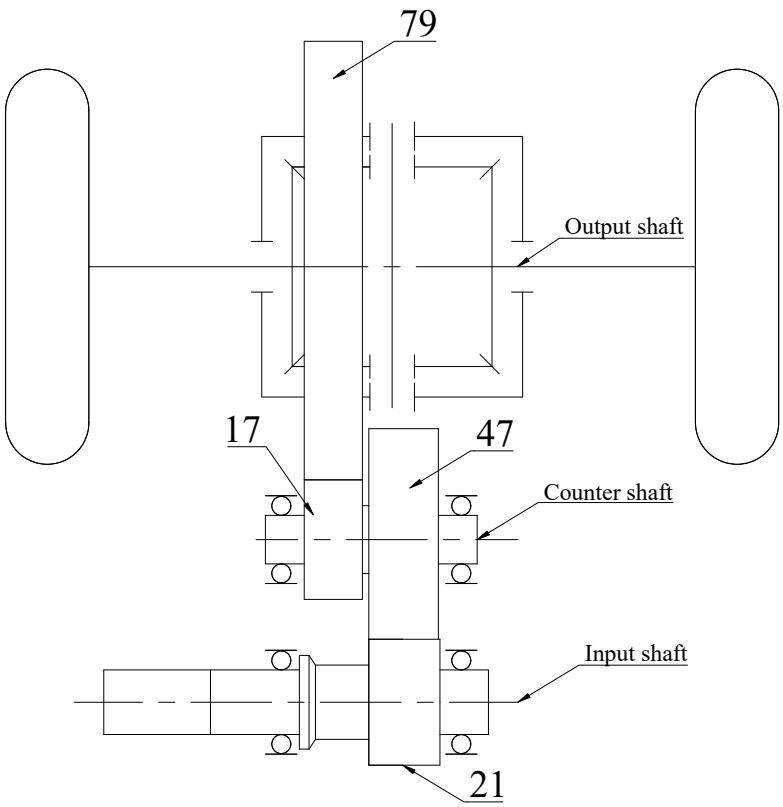

Total reduction ratio	10.400
Primary gear ratio	2.238 (47/21)
Secondary gear ratio	4.647 (79/17)

Vehicle Type	TEV
Transmission system (1)	
Drawing No.	TEV-10-01

For Variant 01:

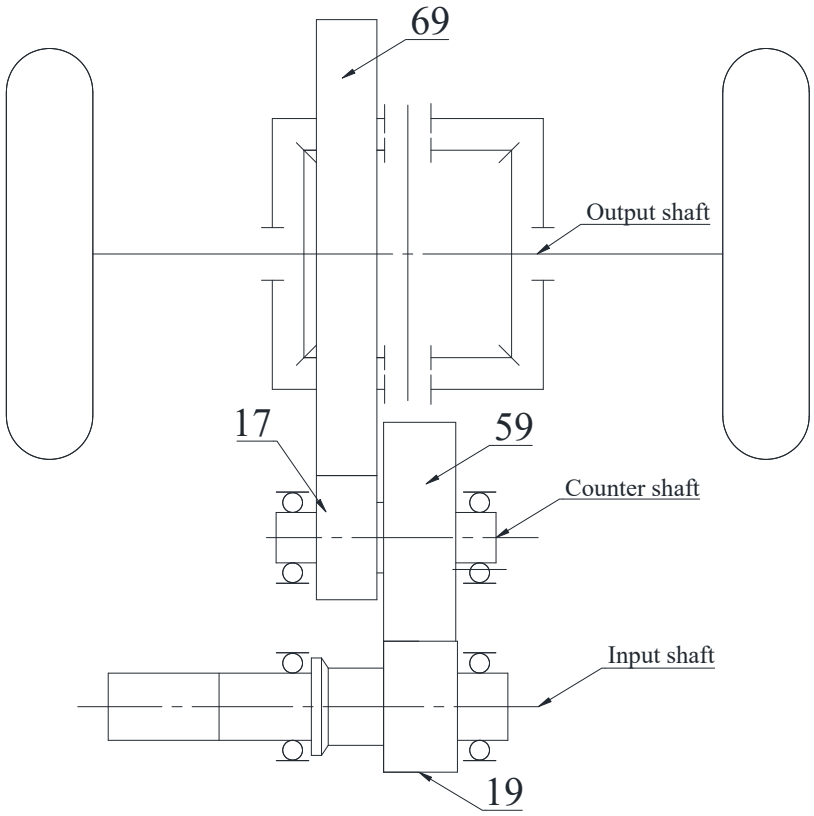

Total reduction ratio	12.603
Primary gear ratio	3.105 (59/19)
Secondary gear ratio	4.059 (69/17)

Vehicle Type	TEV
Transmission system (2)	
Drawing No.	TEV-10-02

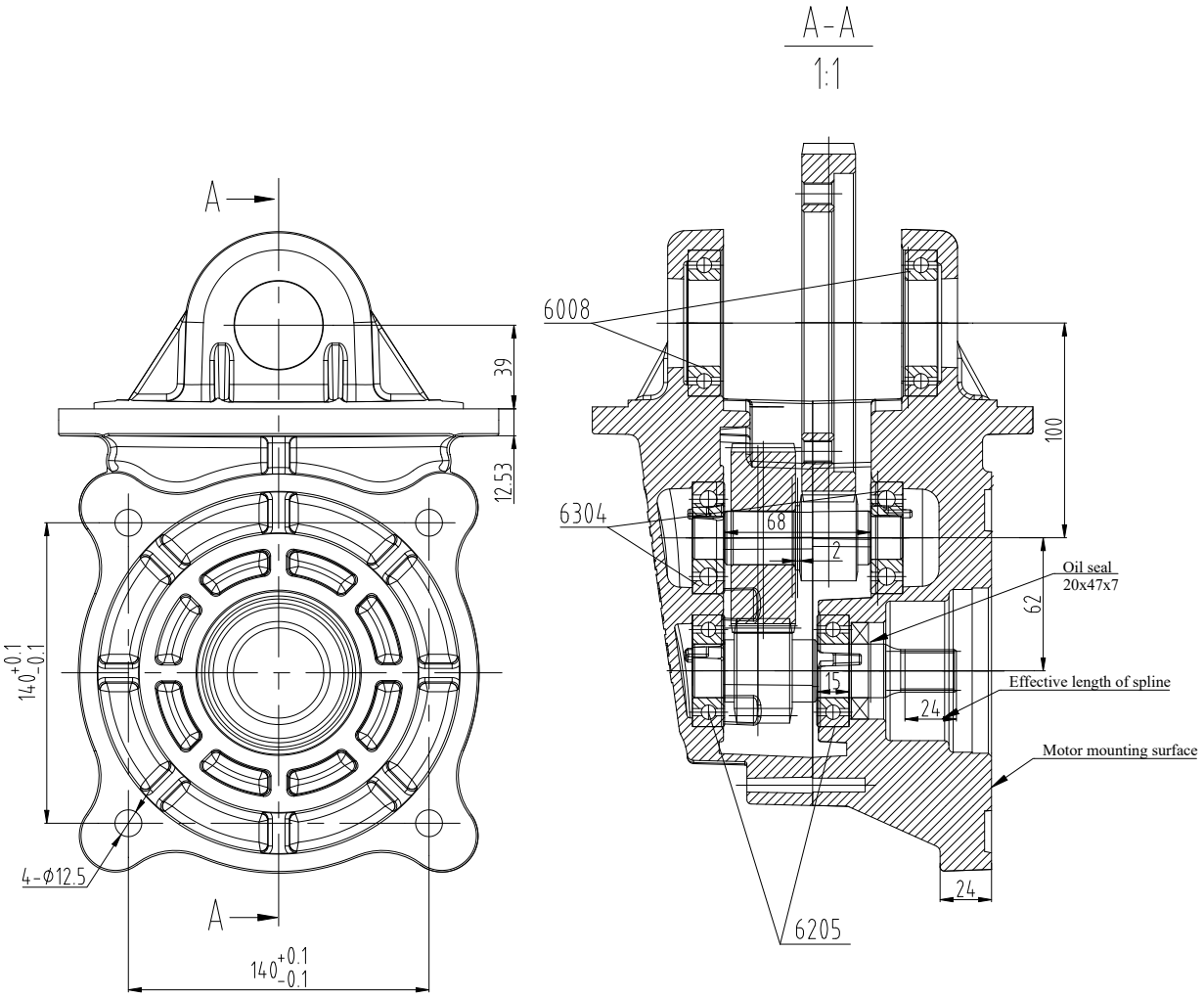

Vehicle Type	TEV
The safe-cornering device	
Drawing No.	TEV-11-01

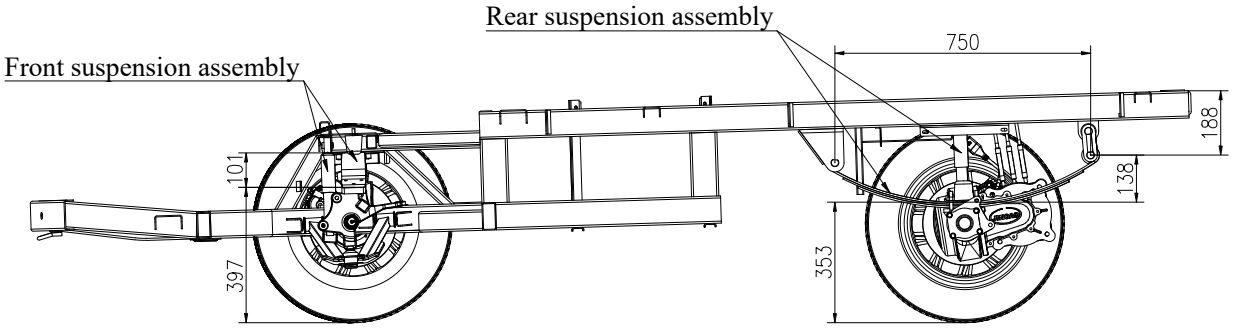

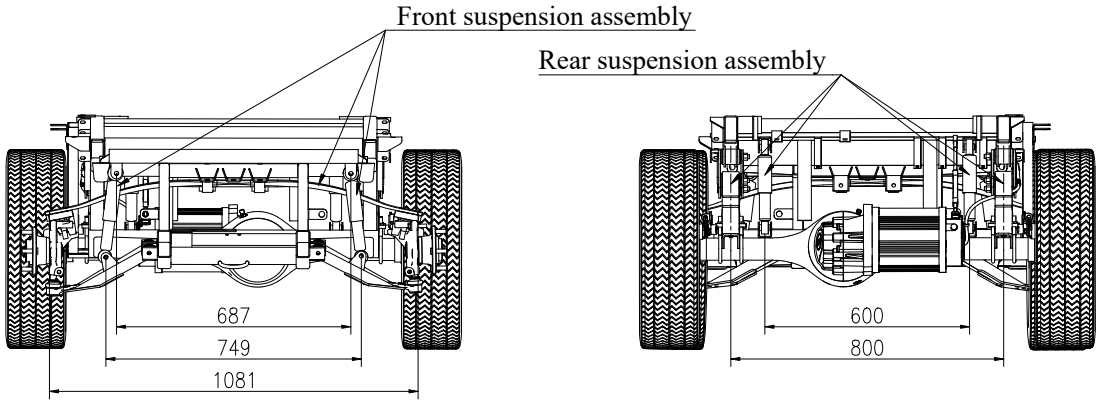

Vehicle Type	TEV
Suspension arrangements	
Drawing No.	TEV-12-01

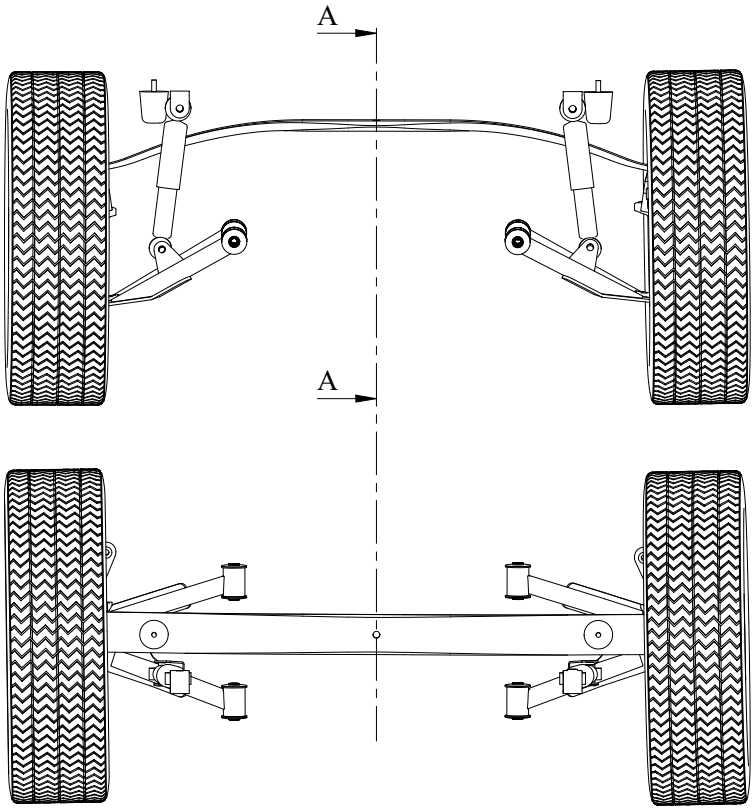

A-A

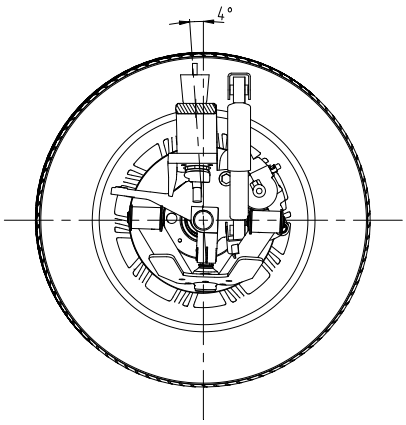

Front damper:

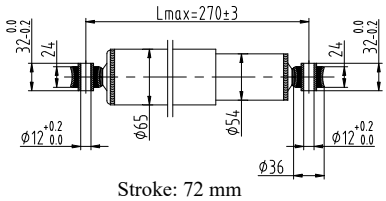

Stroke: 72 mm

Front transverse leaf spring

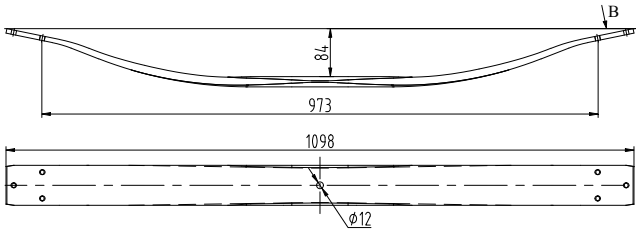

Stroke: 72 mm

B direction

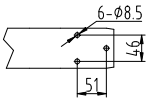

Slice type of long cone rolling as follows:

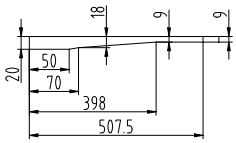

Vehicle Type	TEV
Front suspension	
Drawing No.	TEV-12-02

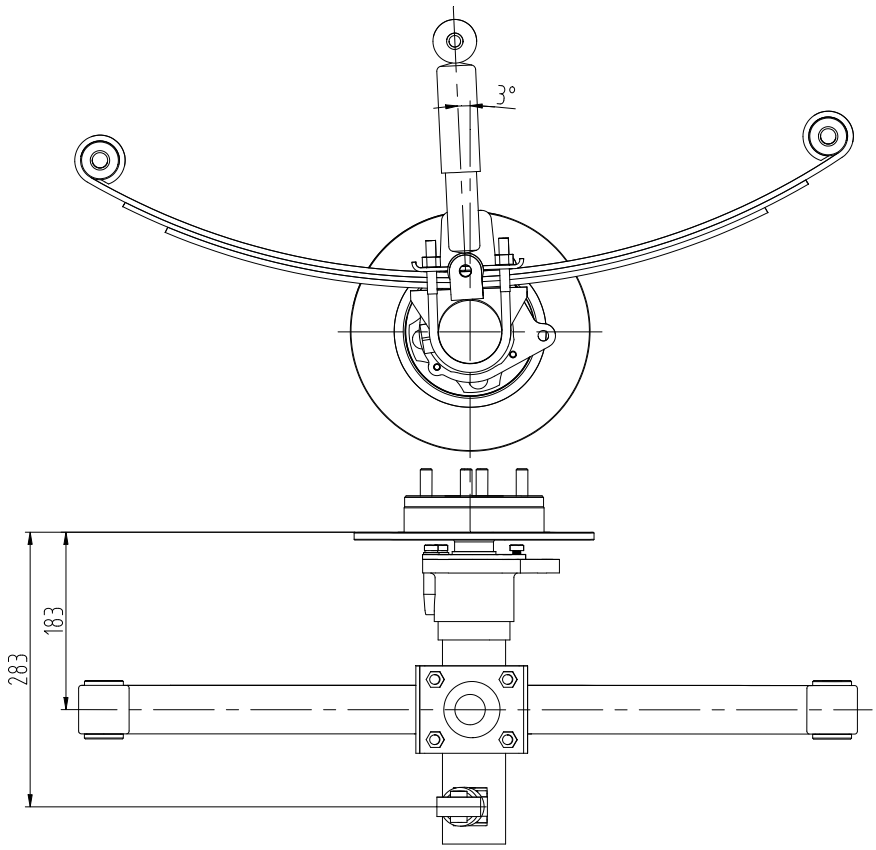

Rear damper:

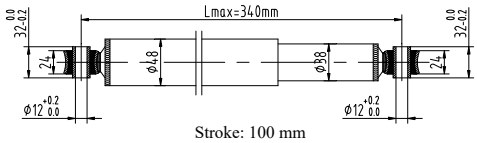

Stroke: 100 mm

Rear leaf spring

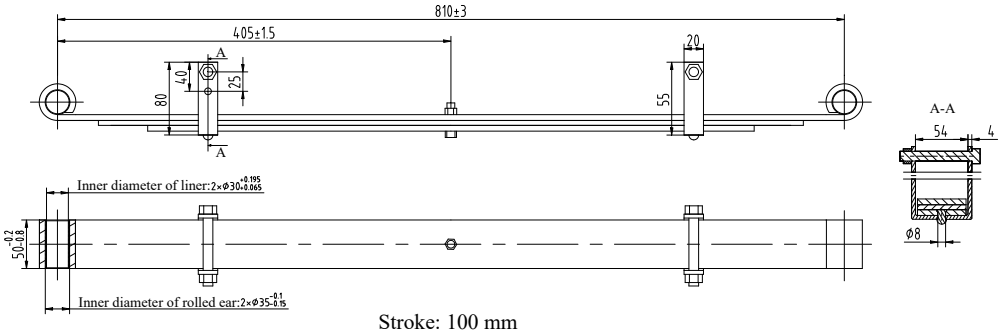

Stroke: 100 mm

Vehicle Type	TEV
Rear suspension	
Drawing No.	TEV-12-03

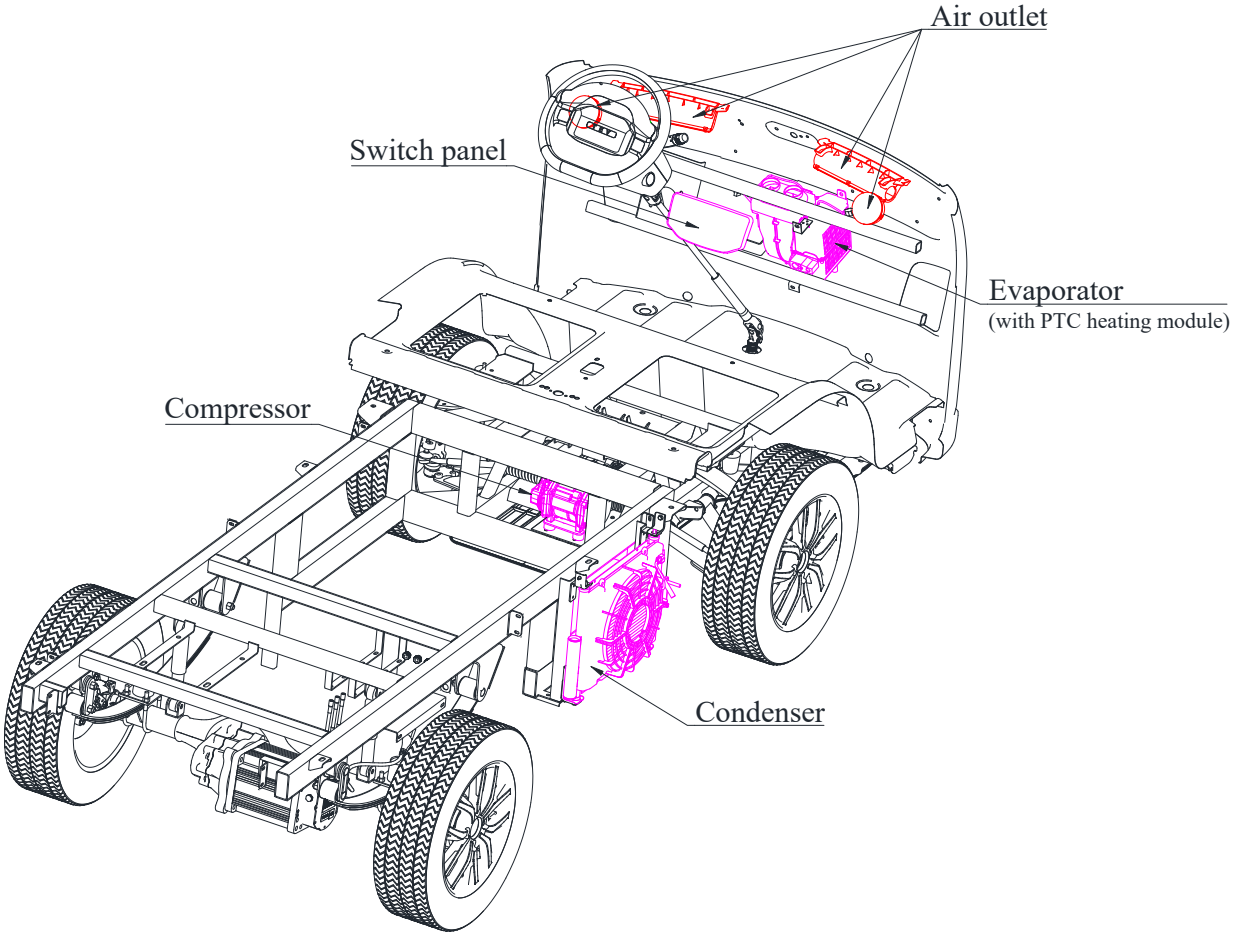

Vehicle Type	TEV
Air-conditioning system	
Drawing No.	TEV-13-01

Compressor:

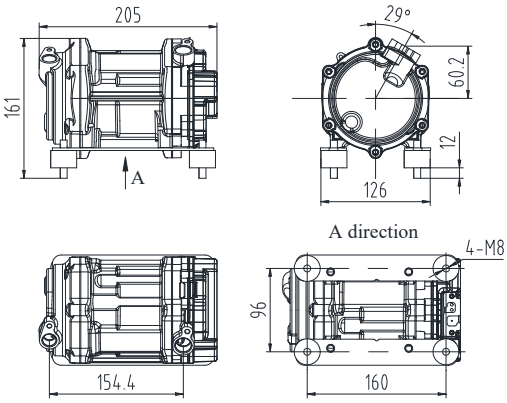

Condenser:

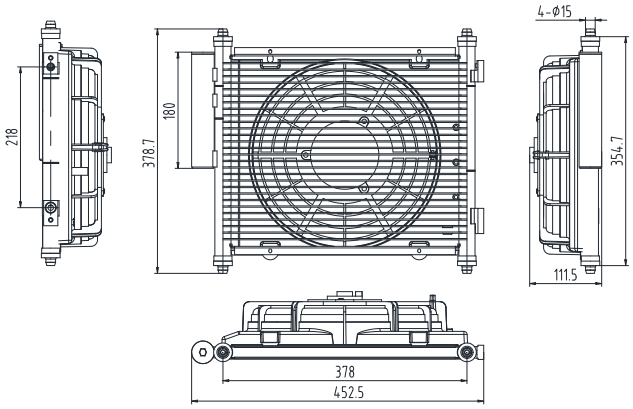

Evaporator (with PTC heating module):

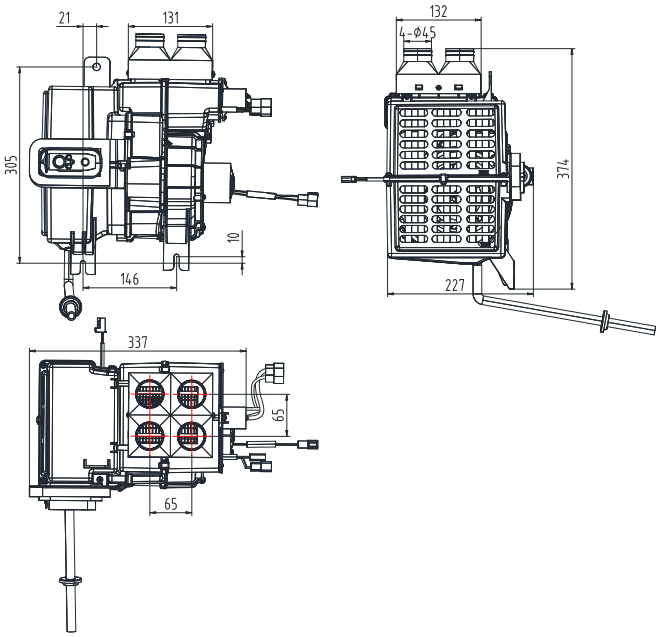

Vehicle Type	TEV
Main components of air-conditioning system	
Drawing No.	TEV-14-01

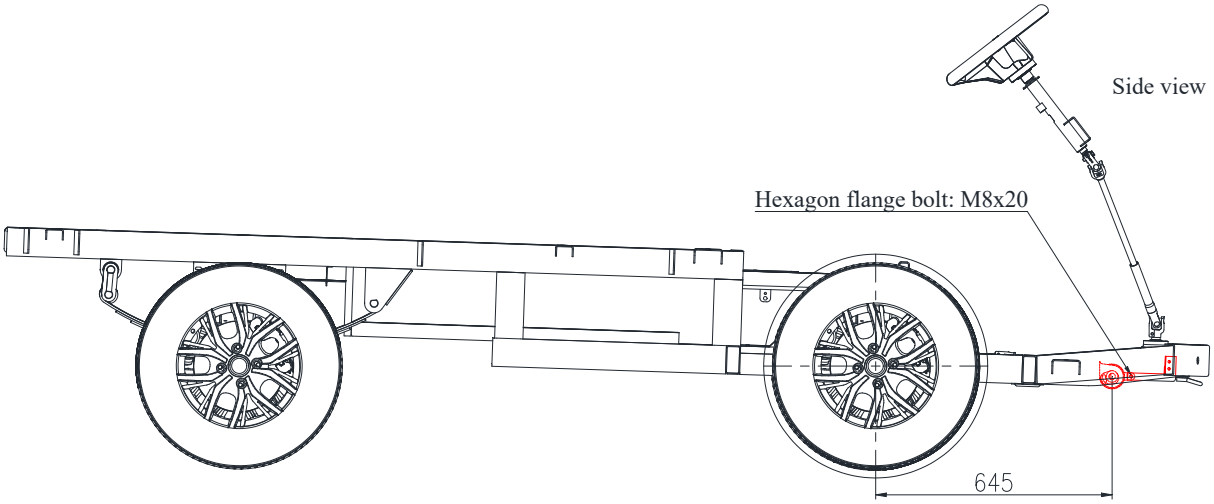

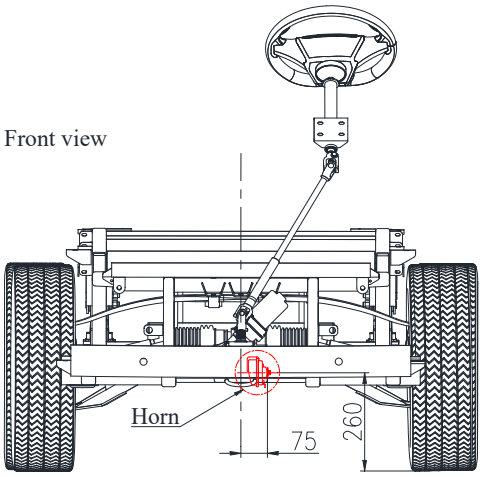

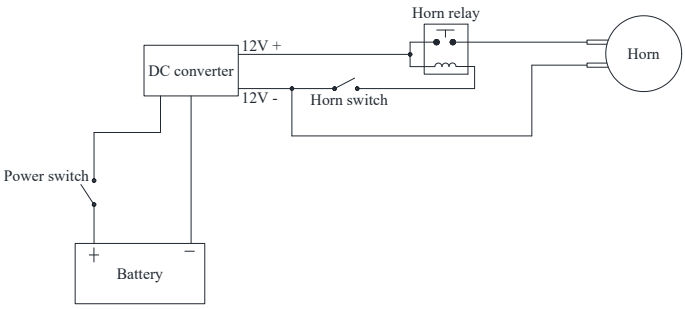

Vehicle Type	TEV
Locations and detail of the audible warning device	
Drawing No.	TEV-15-01

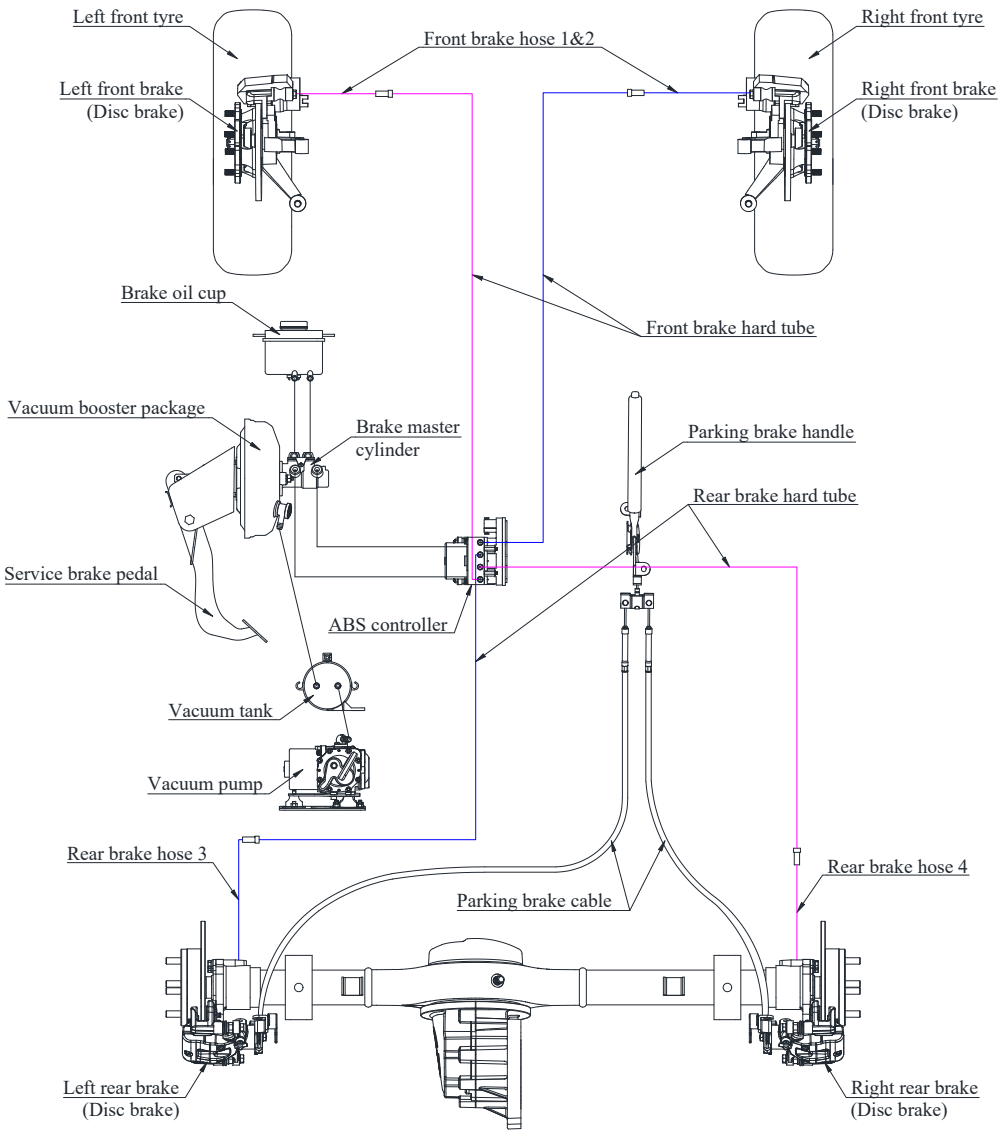

Split service brake system (SSBS): The braking system is controlled by the pedal acting on the master cylinder, and the oil circuit is controlled by the master cylinder to via ABS controller to control the front and rear wheels, and a single failure in one subsystem will not affect the operation of the other.
Parking brake acts on rear wheels.

ABS control: X-type hydraulic split service brake system actuated by foot pedal and mechanical parking brake actuated by handle. (four-channel, two sensor in front wheel and two in rear wheel)

ABS module:
Manufacturer: Wuhan YOUFIN Automobile Electronic Control System Co., Ltd.
Make: YOUFIN
Type: YF9-HAL-B

Vehicle Type	TEV
Braking system	
Drawing No.	TEV-16-01

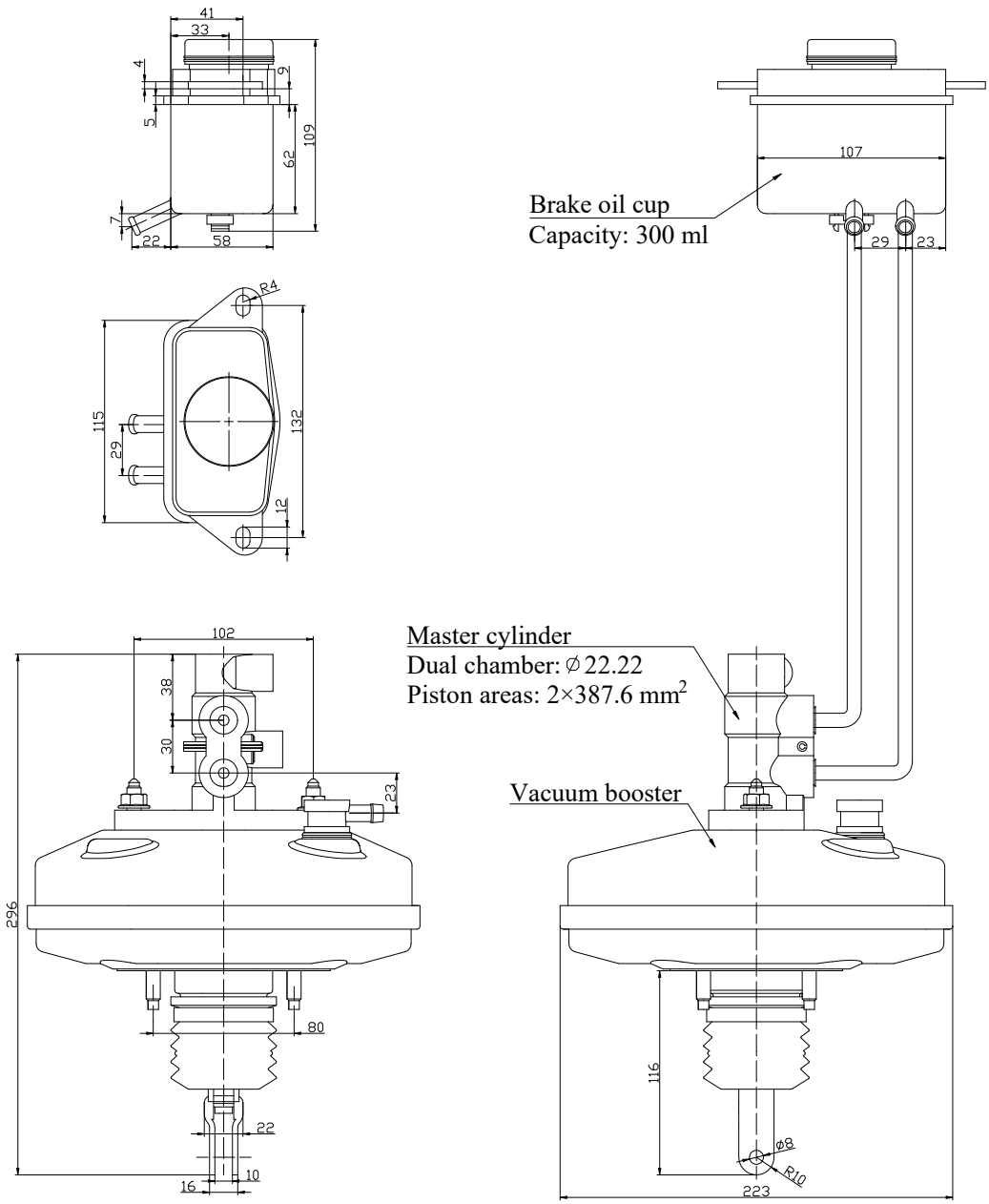

Vehicle Type	TEV
Hydraulic reservoir	
Drawing No.	TEV-17-01

Front brake hose 1&2:

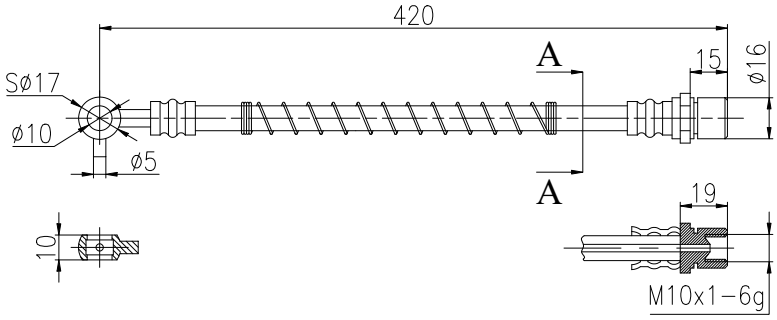

A-A
5:1

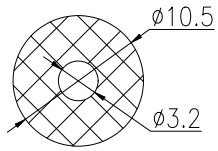

Front brake hose marking
5:1

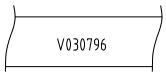

Rear brake hose 3&4:

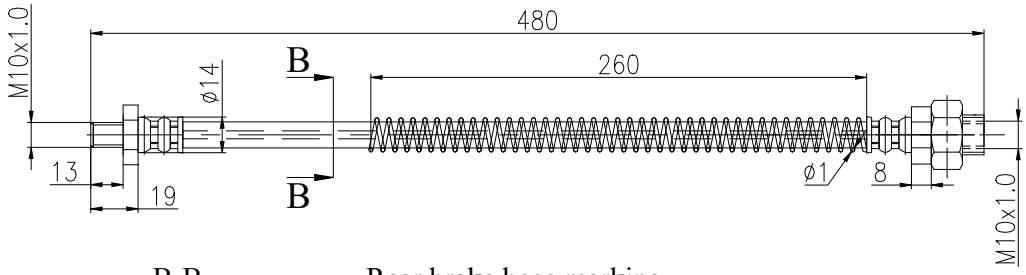

B-B
5:1

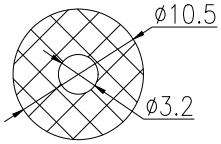

Rear brake hose marking
5:1

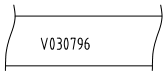

Inside diameter of hose: 3.2 mm
Outside diameter of hose: 10.5 mm

Vehicle Type	TEV
Brake hose	
Drawing No.	TEV-18-01

Front brake assembly:

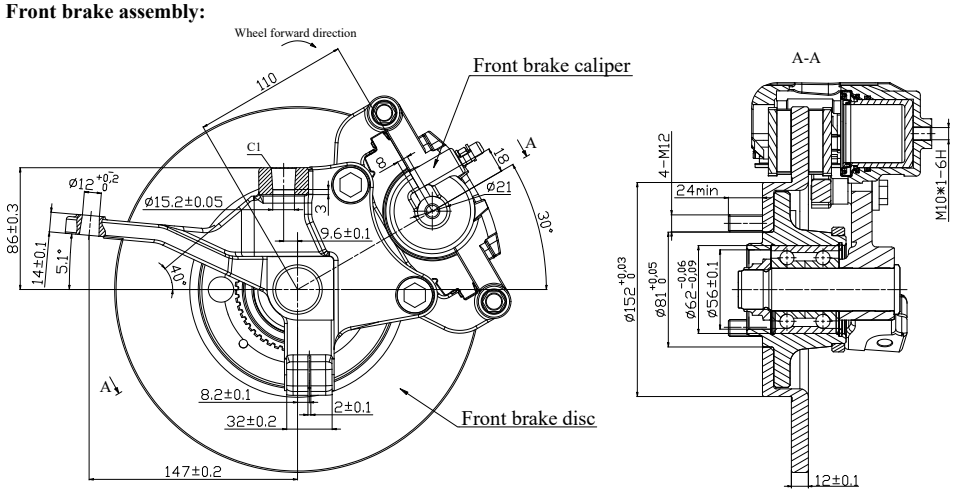

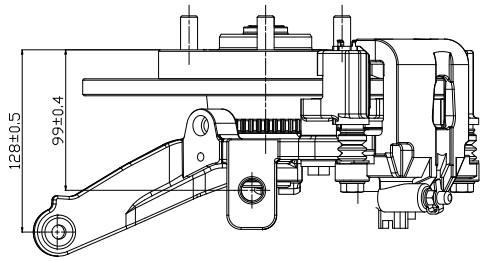

ABS ring gear:

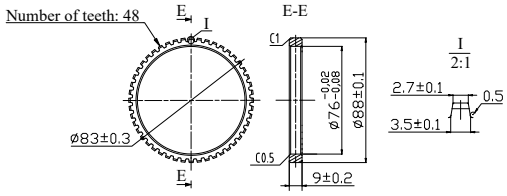

Front brake caliper assembly:

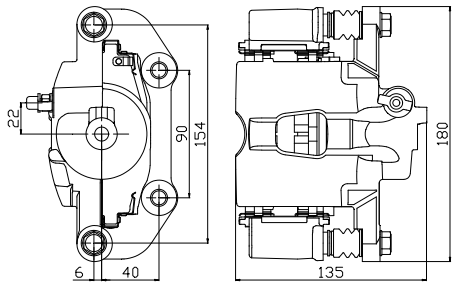

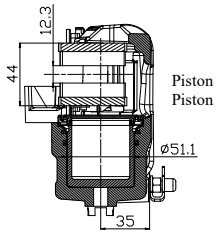

Piston of front brake caliper: φ51.1
Piston areas of front brake caliper: 2049.8 mm ^{2}

Front brake disc:

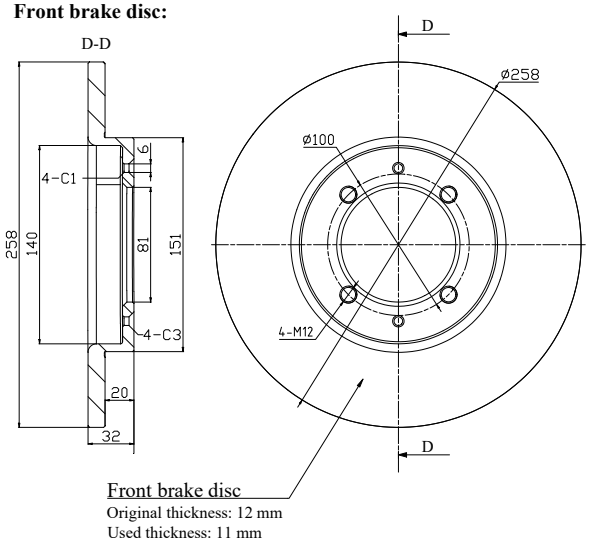

Front brake disc
Original thickness: 12 mm
Used thickness: 11 mm

Front brake disc: Manufacturer: Bazhou Huacheng Automotive Brake Co., Ltd
Type: 258

Front brake caliper: Manufacturer: Bazhou Huacheng Automotive Brake Co., Ltd
Type: HC-JM-3501100/200

Vehicle Type	TEV
Front brake details	
Drawing No.	TEV-19-01

Rear brake assembly:

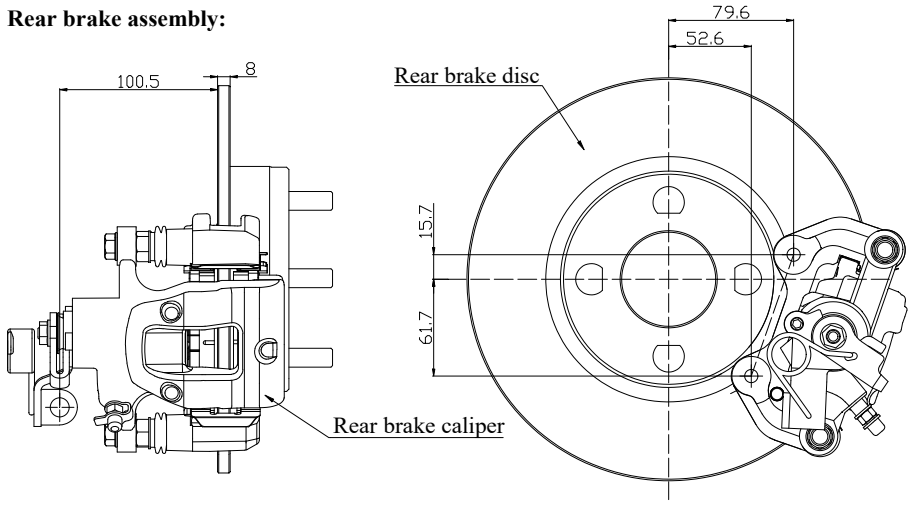

Rear brake caliper assembly:

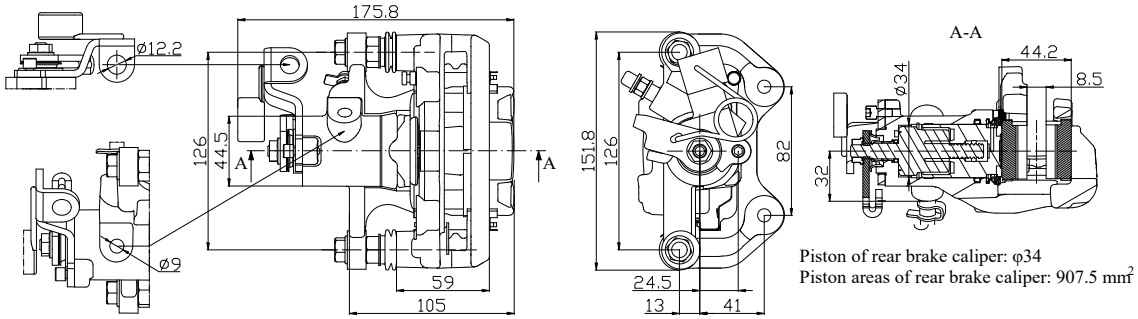

Piston of rear brake caliper: φ34

Piston areas of rear brake caliper: 907.5 mm²

Rear brake disc:

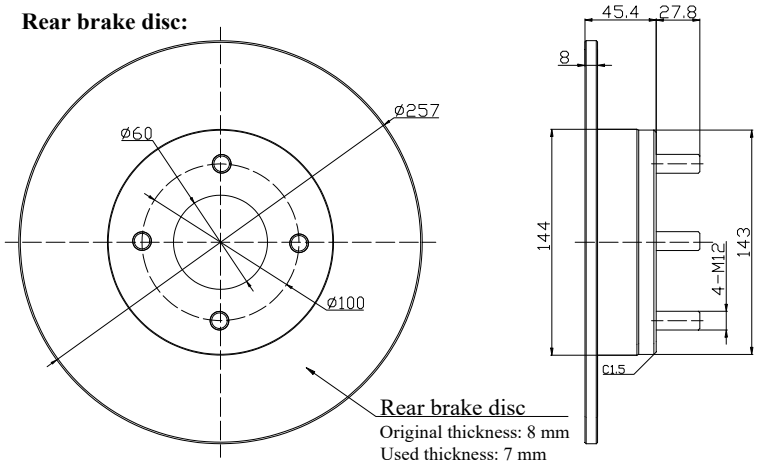

ABS ring gear:

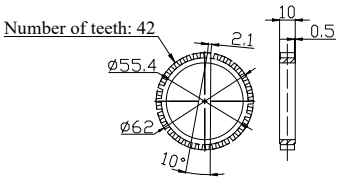

Rear brake disc: Manufacturer: Bazhou Huacheng Automotive Brake Co., Ltd
Type: 257

Rear brake caliper: Manufacturer: Bazhou Huacheng Automotive Brake Co., Ltd
Type: HC-JM-3502100/200

Vehicle Type	TEV
Rear brake details	
Drawing No.	TEV-20-01

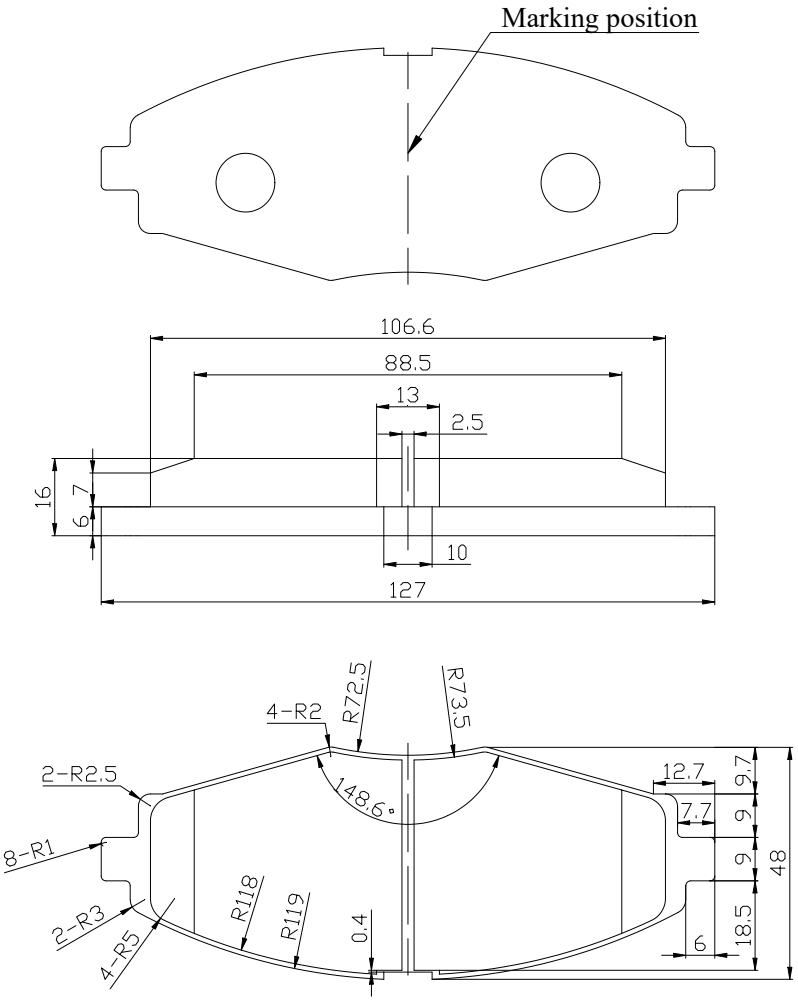

Manufacturer: HUNAN BOYUN AUTOMOBILE BRAKE MATERIALS CO., LTD. (HNBY)
Type: 3501EAC
Marking: 3501EAC
Effective brake areas: 2001 mm² (single piece)
Material: Combined material
Asbestos free

Vehicle Type	TEV
Front brake pads assy	
Drawing No.	TEV-21-01

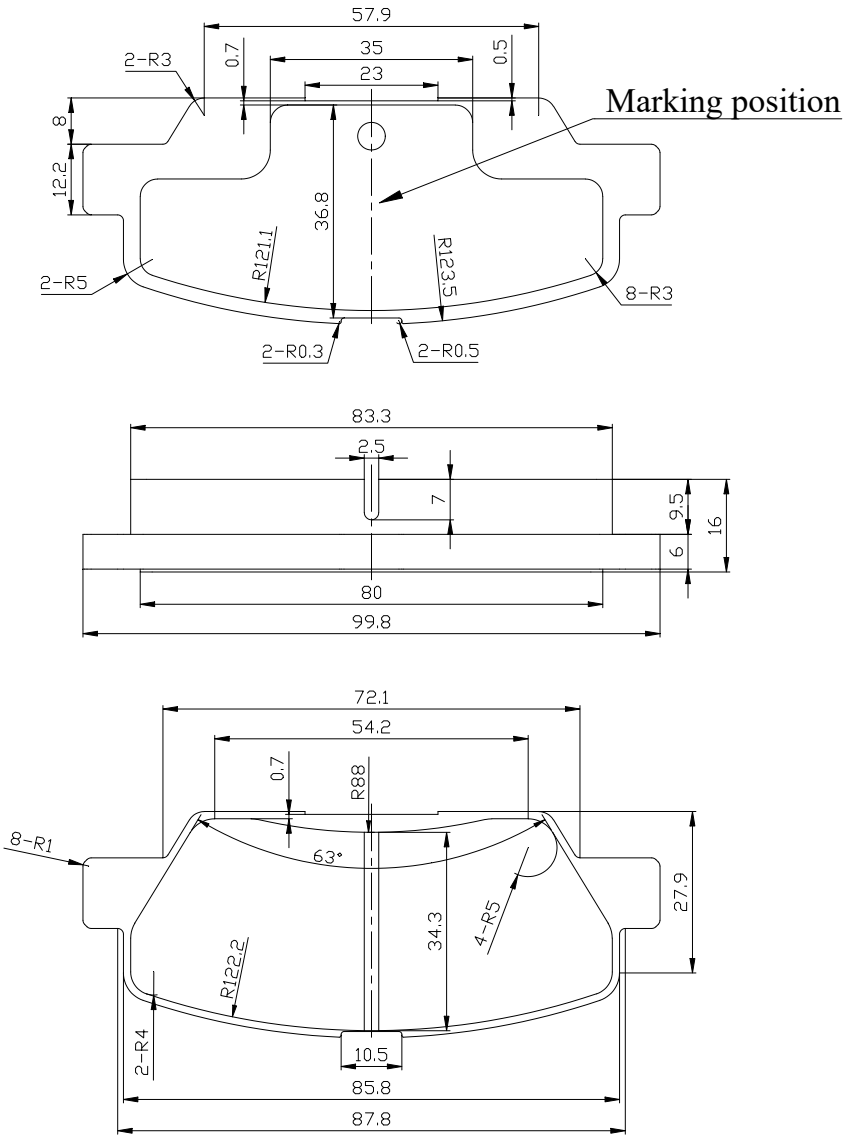

Manufacturer: HUNAN BOYUN AUTOMOBILE BRAKE MATERIALS CO., LTD. (HNBY)
Type: 79.8*36*9.5
Marking: 79.8*36*9.5
Effective brake areas: 1263.5 mm² (single piece)
Material: Combined material
Asbestos free

Vehicle Type	TEV
Rear brake pads assy	
Drawing No.	TEV-22-01

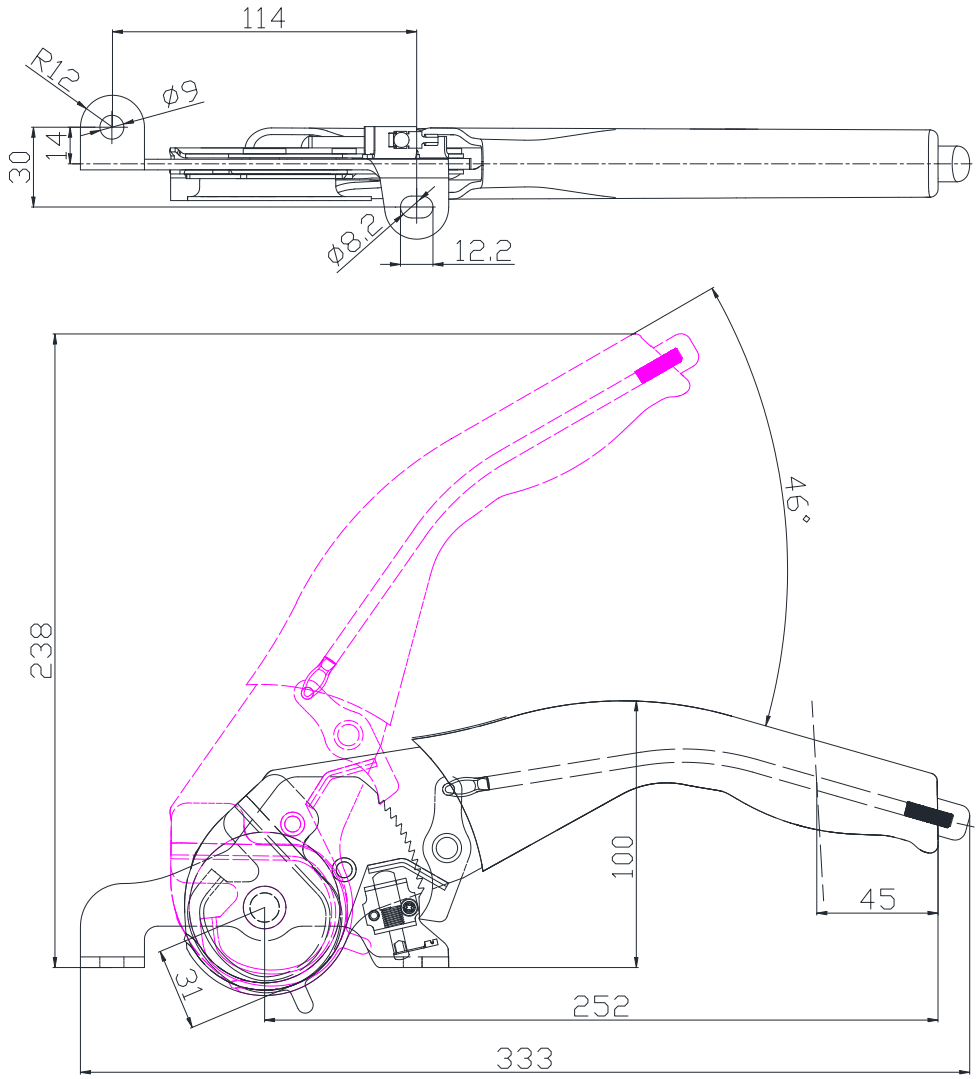

Handle ratio: 6.68

Vehicle Type	TEV
Parking brake handle	
Drawing No.	TEV-23-01

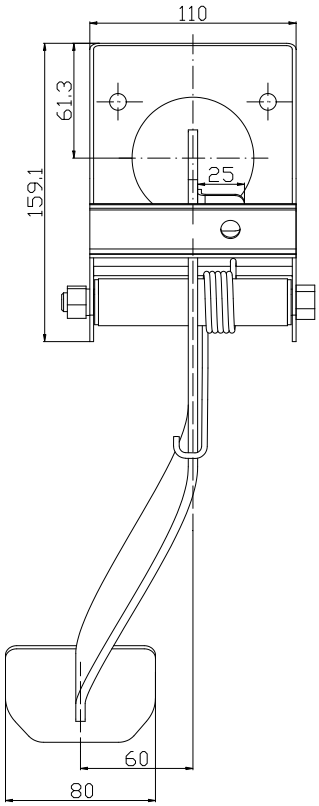

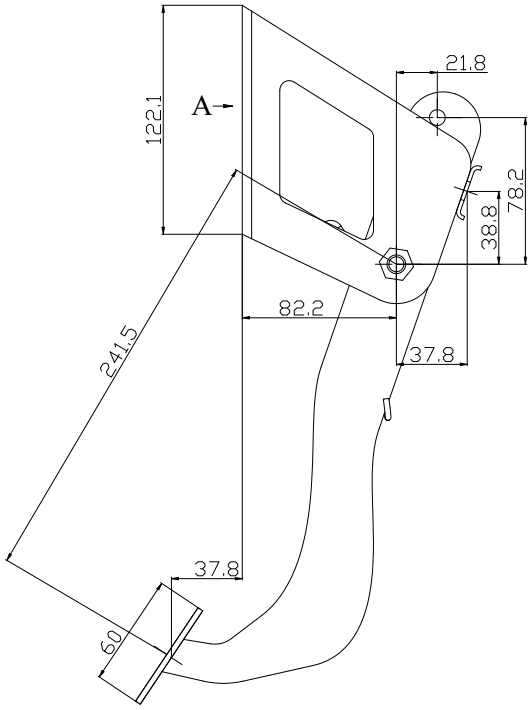

A direction

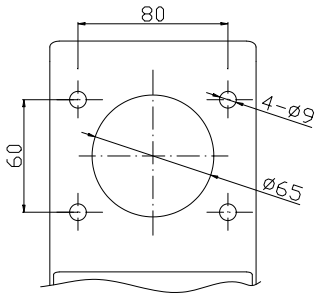

Pedal ratio: 3.09

Vehicle Type	TEV
Service brake pedal	
Drawing No.	TEV-24-01

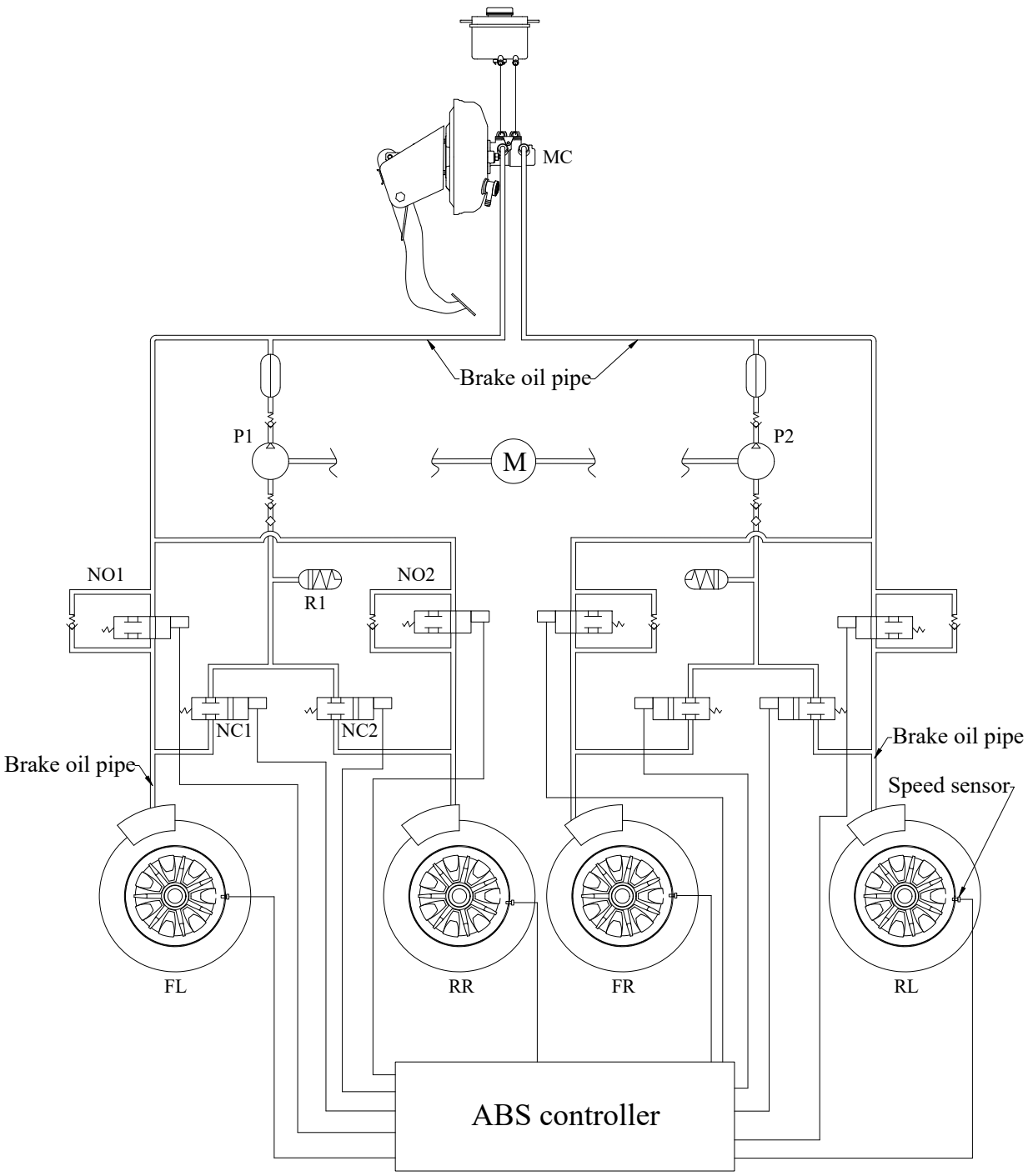

Vehicle Type	TEV
ABS schematic diagram	
Drawing No.	TEV-25-01

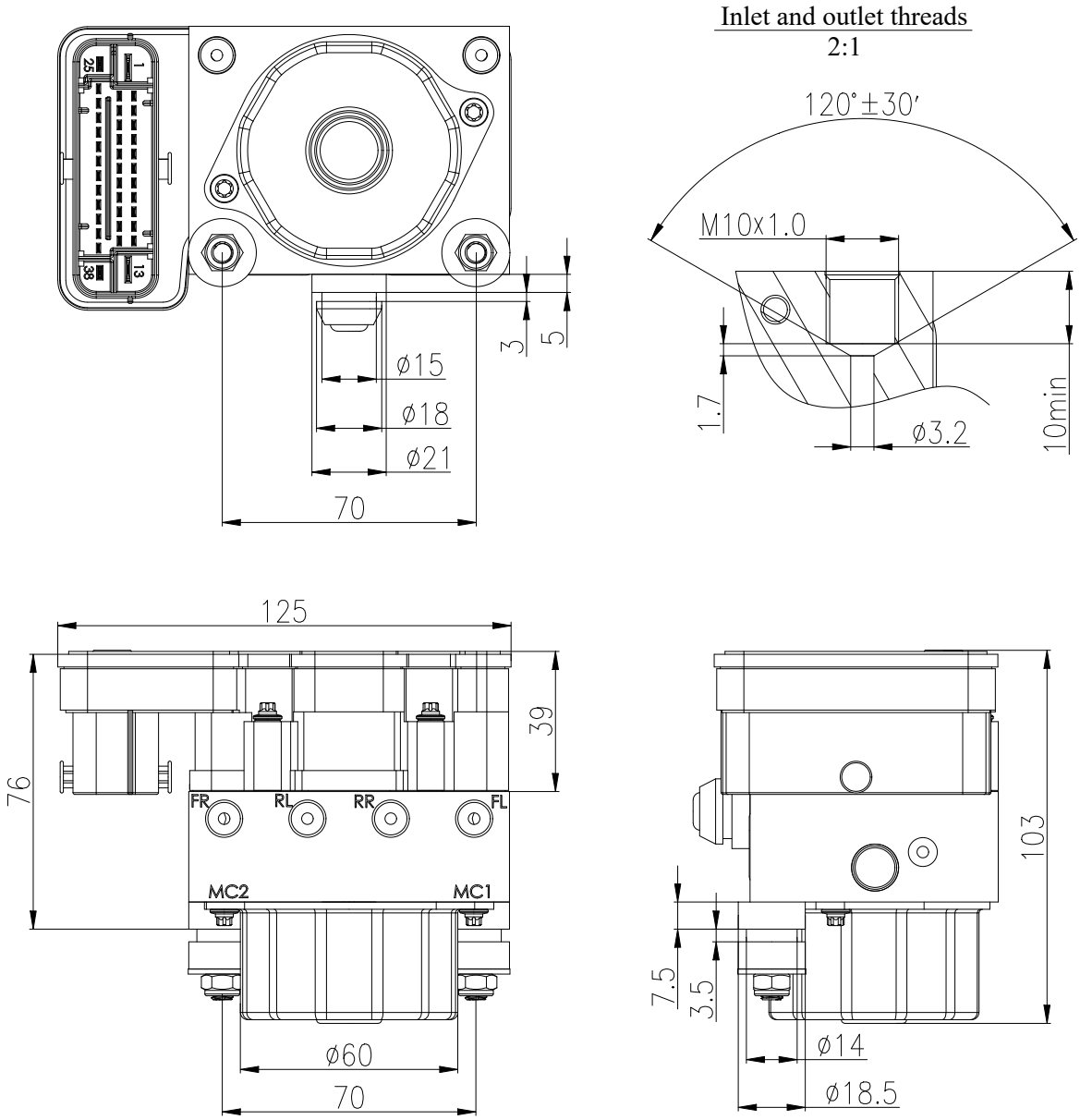

Vehicle Type	TEV
Hydraulic electronic control unit	
Drawing No.	TEV-25-02

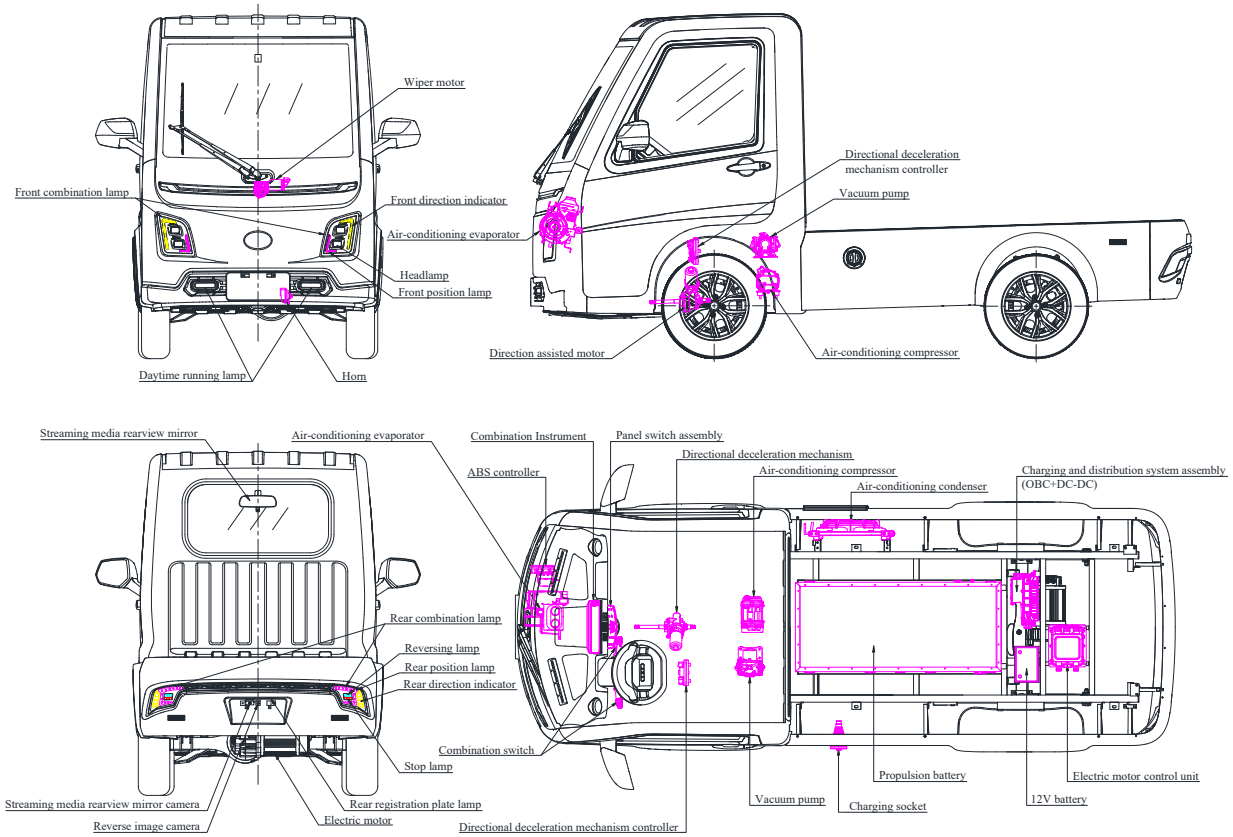

Vehicle Type	TEV
Location of power circuit components	
Drawing No.	TEV-26-01

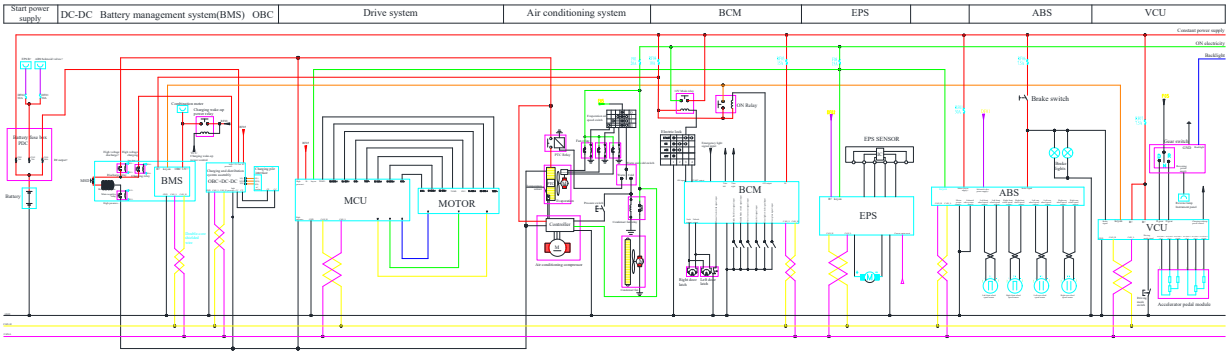

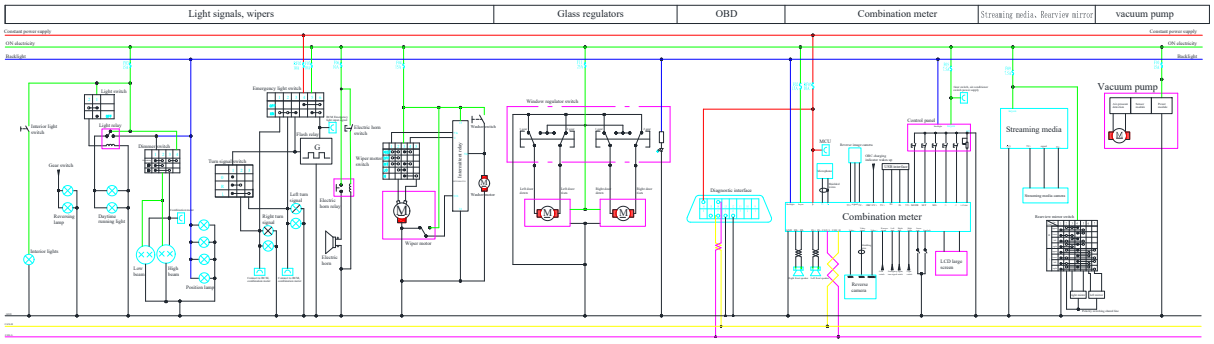

Vehicle Type	TEV
Electrical circuit diagram	
Drawing No.	TEV-27-01

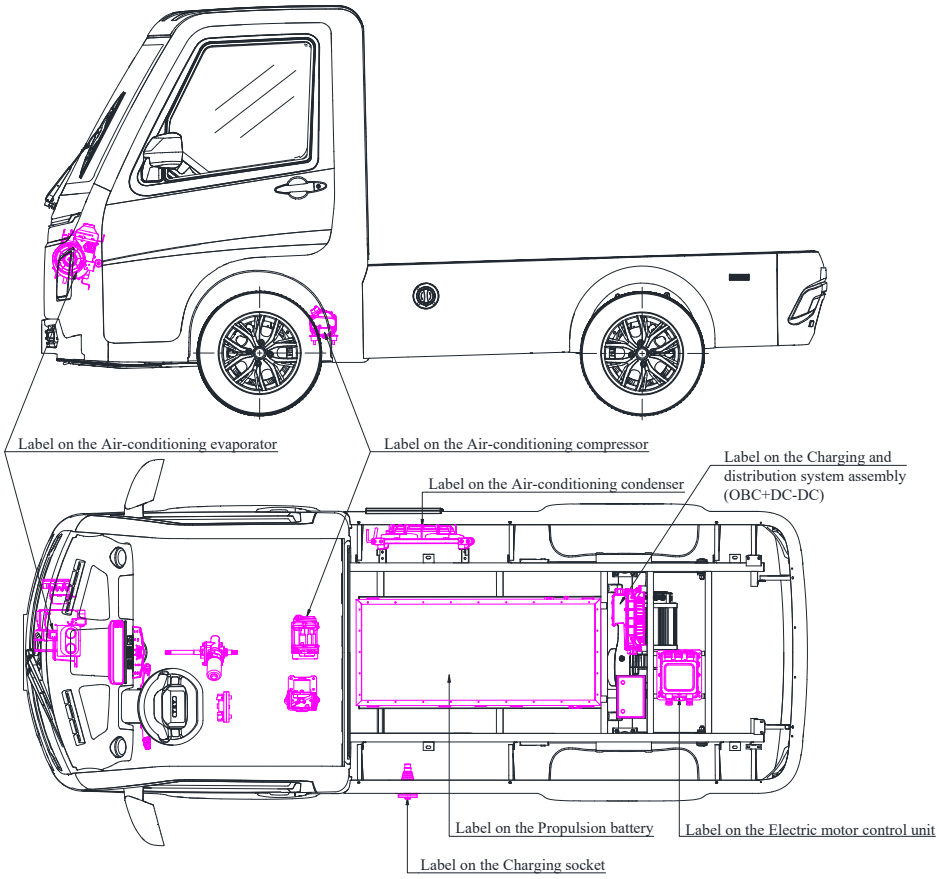

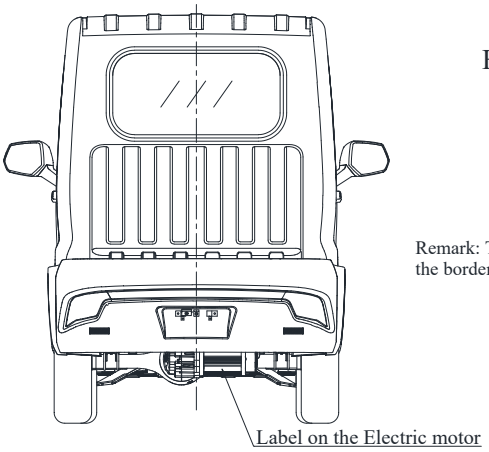

High voltage label:

Remark: The symbol background shall be yellow, the bordering and the arrow shall be black.

Vehicle Type	TEV
Location of high voltage label	
Drawing No.	TEV-28-01

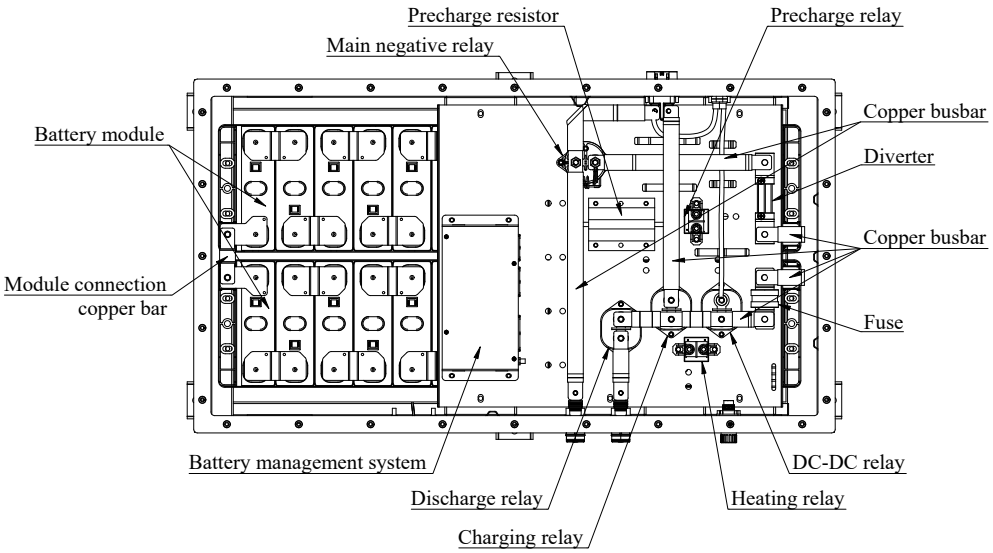

Fuse

5:1

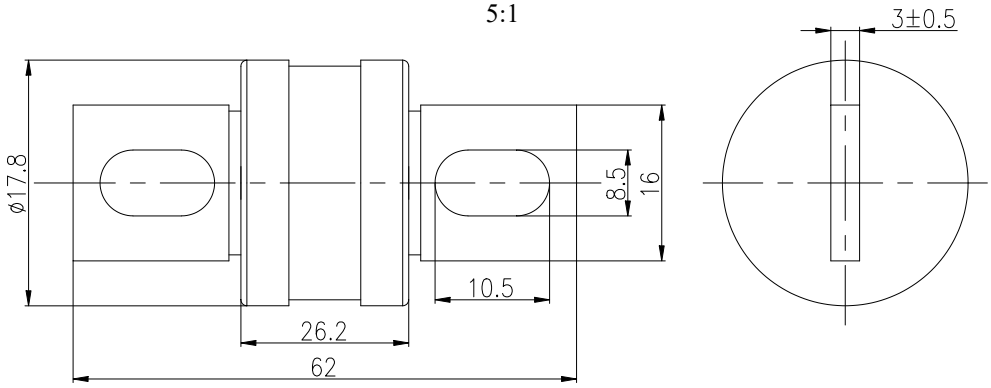

Remark: When the current exceeds 350 A, the overload protector is disconnected.

Vehicle Type	TEV
Fuse	
Drawing No.	TEV-29-01

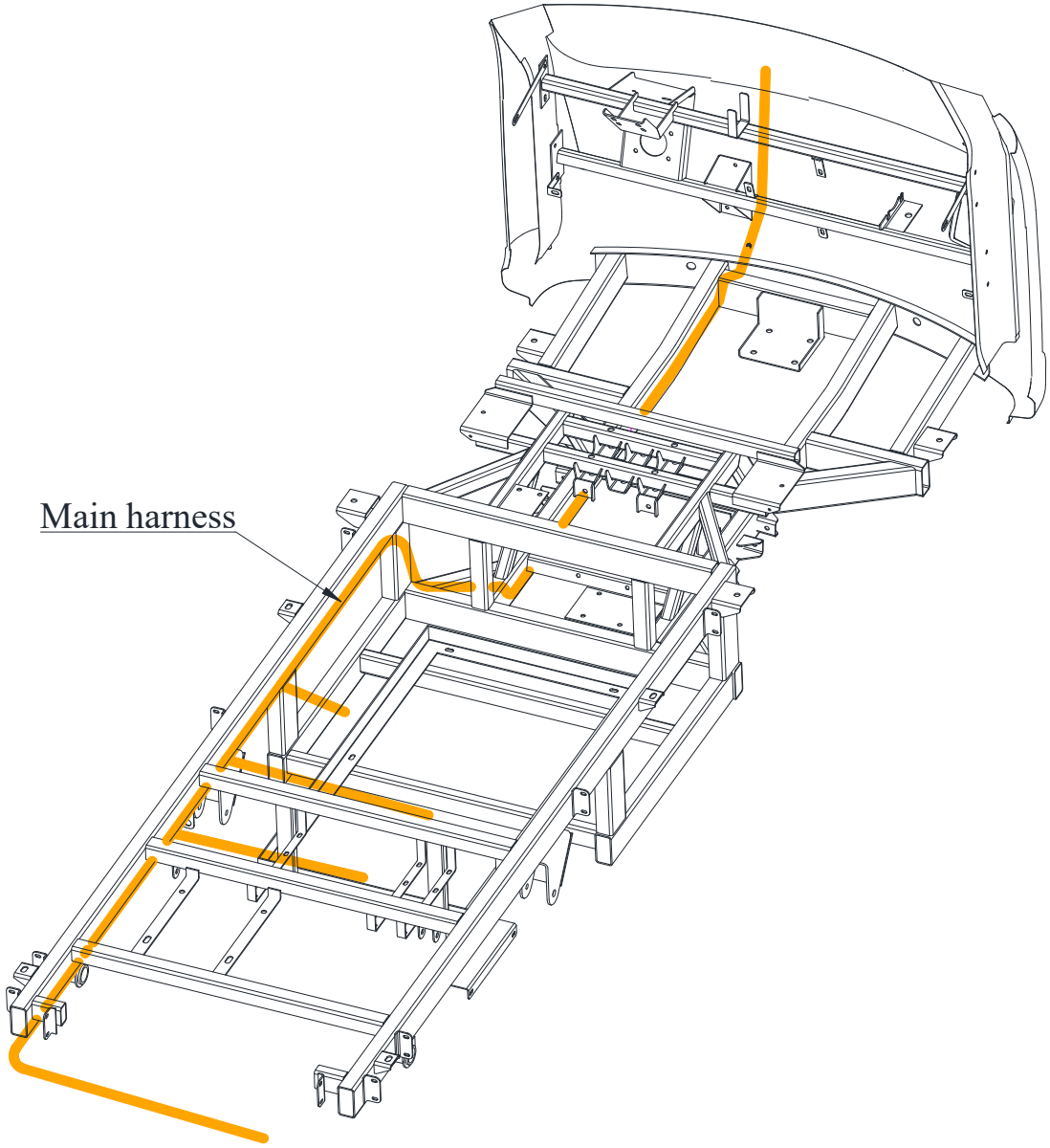

Remark: The exposed cables with voltage over 60V are in orange.

Vehicle Type	TEV
Power wiring harness	
Drawing No.	TEV-30-01

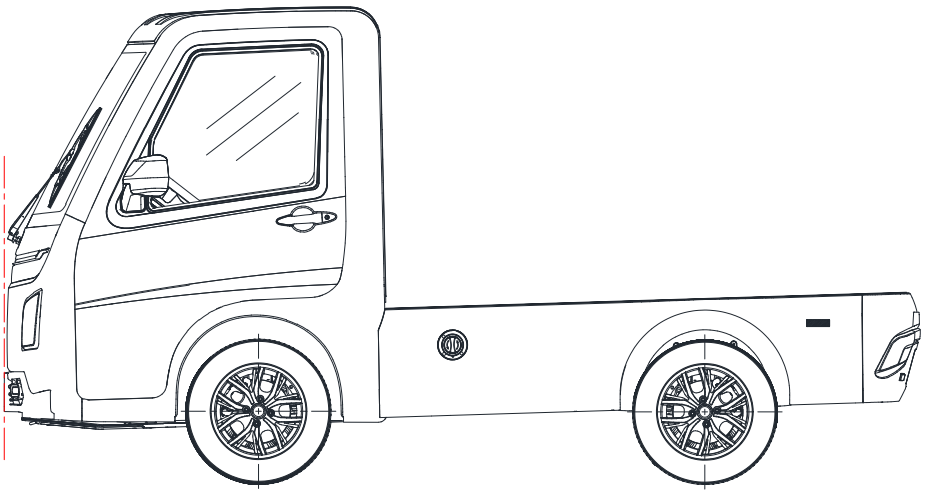

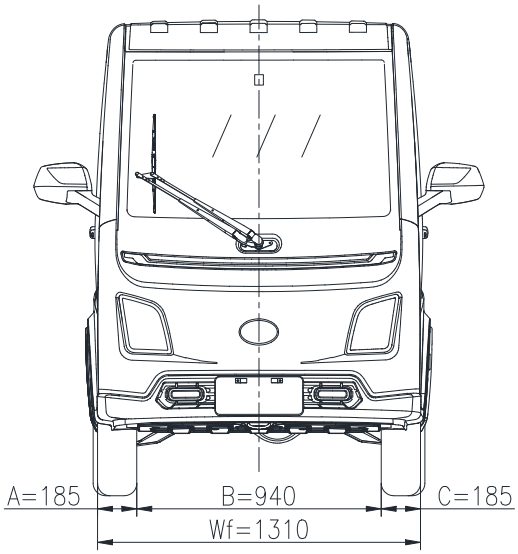

A+B+C≥2/3Wf
185+940+185=1310≥2/3*1310=873

Vehicle Type	TEV
Front protective structure	
Drawing No.	TEV-31-01

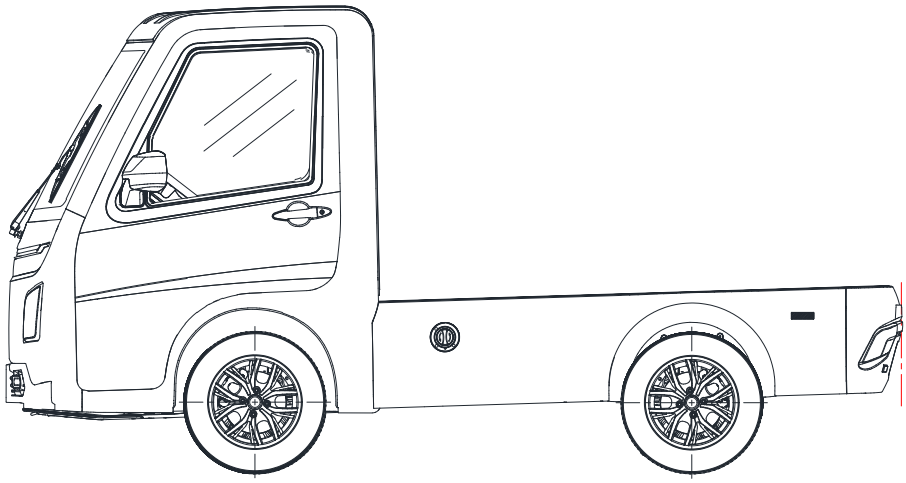

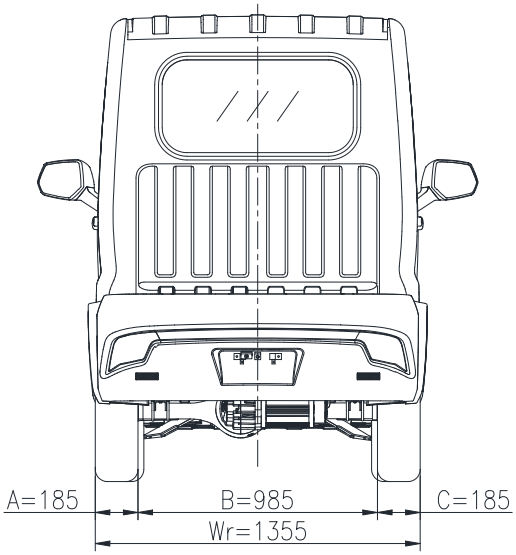

A+B+C≥2/3Wr
185+985+185=1355≥2/3*1355=903

Vehicle Type	TEV
Rear protective structure	
Drawing No.	TEV-31-02

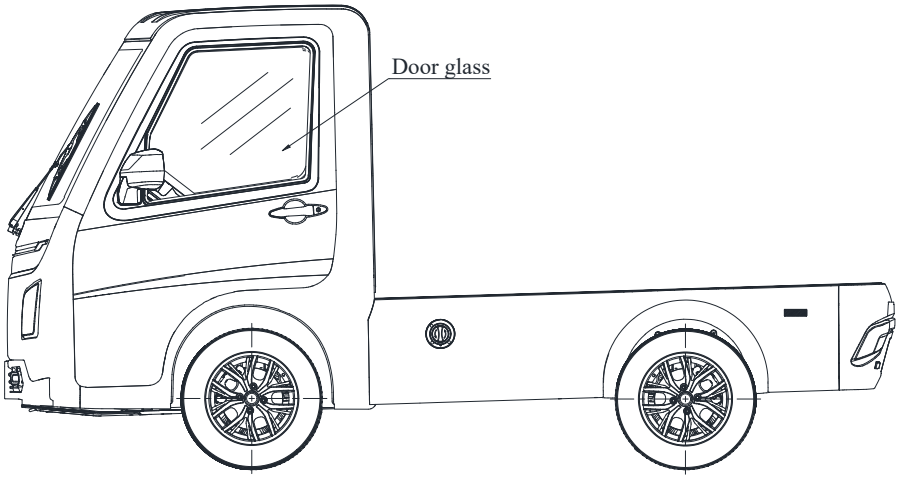

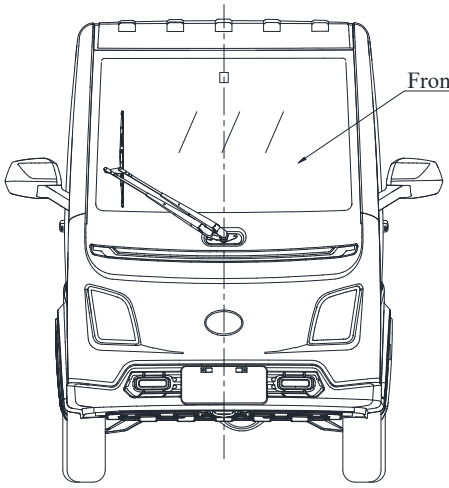

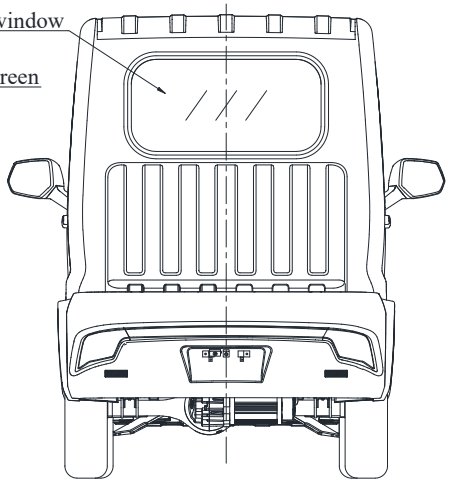

Glazing		Trade mark	Approval mark	Class
Windscreen			II E24 43R-010118	II
Other windows	Option 1		E24 43R-010116	II
	Option 2		III E24 43R-010026	III
	Option 3		E13 43R-019765	II

Vehicle Type	TEV
The windscreen and other glasses	
Drawing No.	TEV-32-01

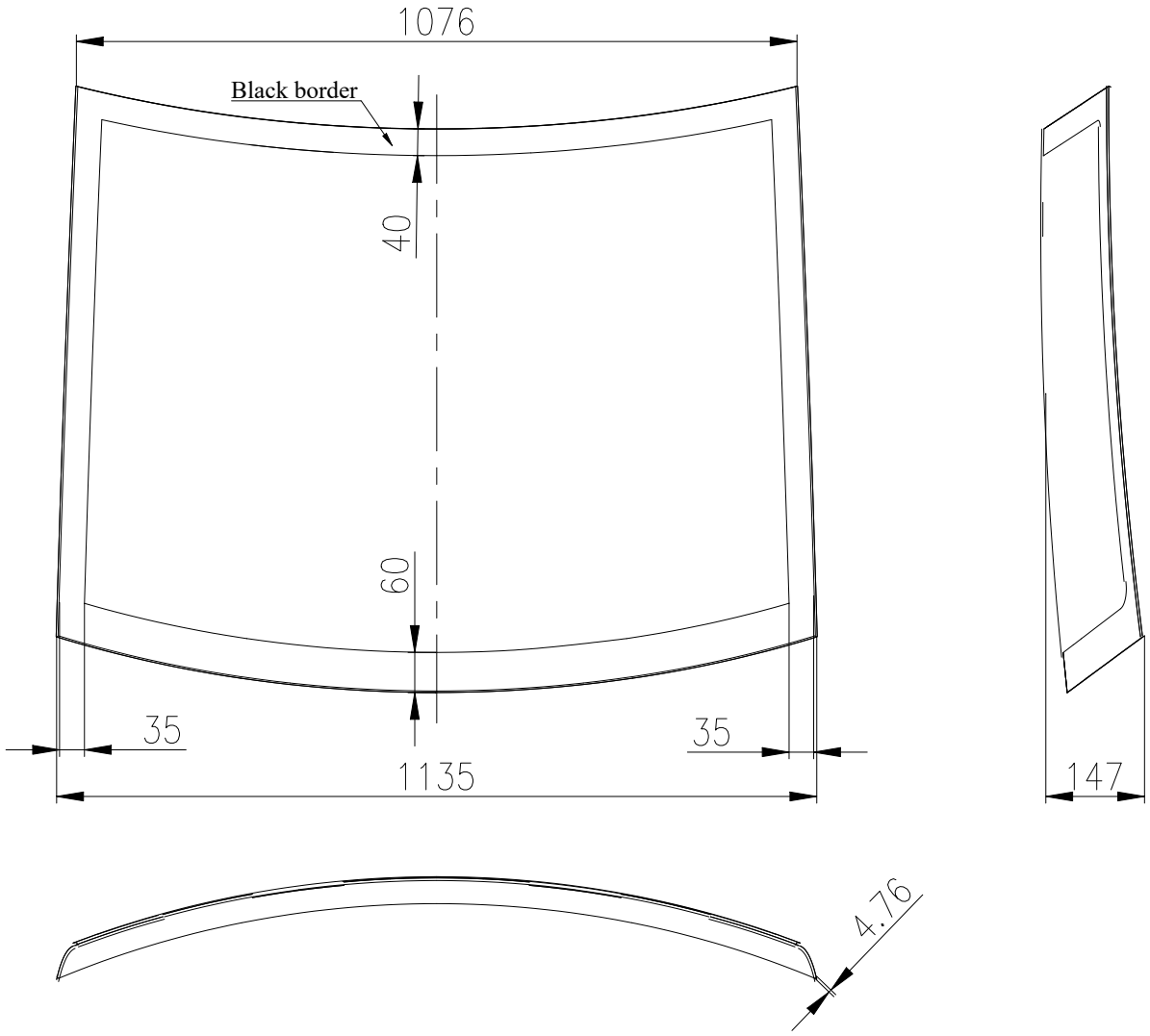

Vehicle Type	TEV
The windscreen glass	
Drawing No.	TEV-32-02

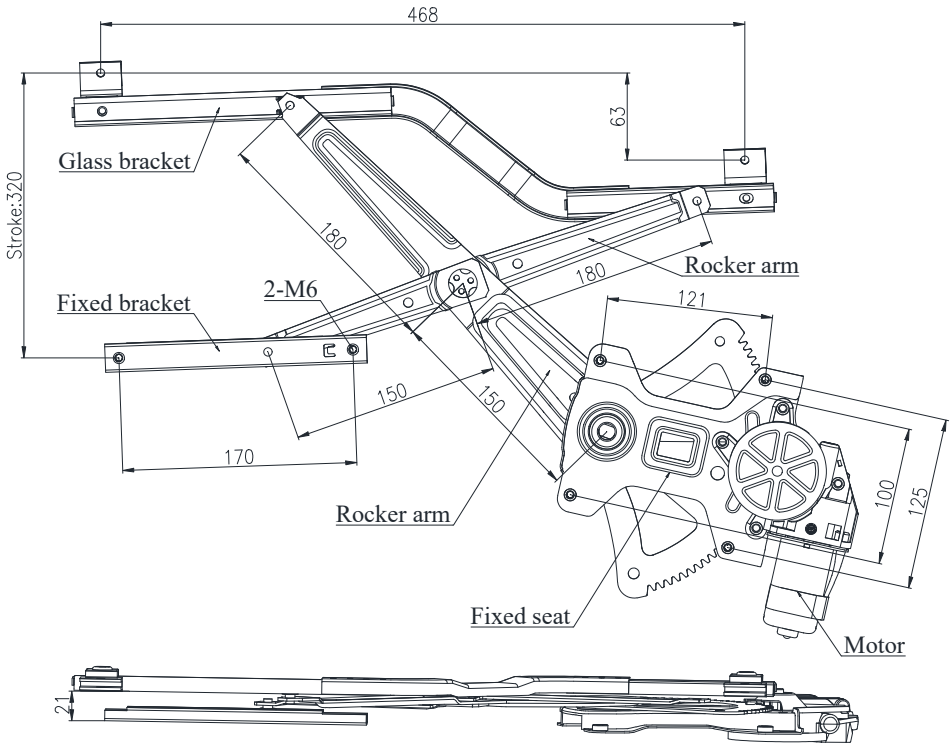

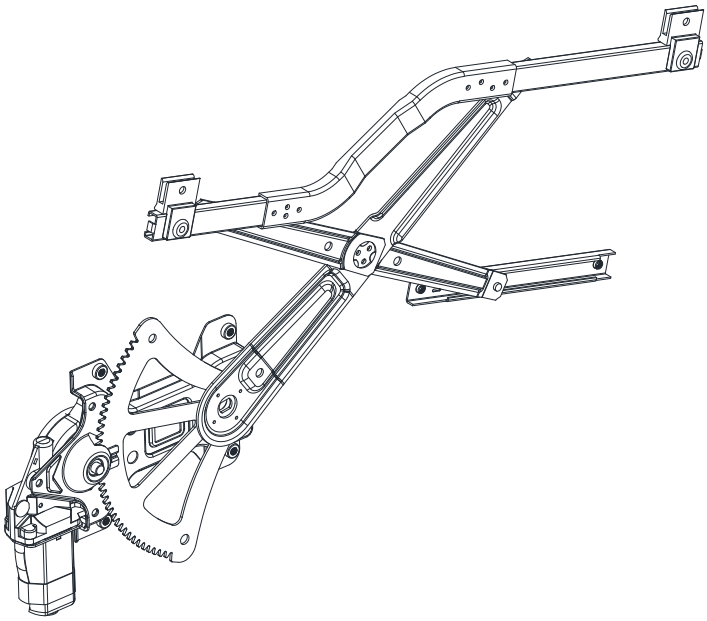

Vehicle Type	TEV
Detail of the window lifting mechanism	
Drawing No.	TEV-33-01

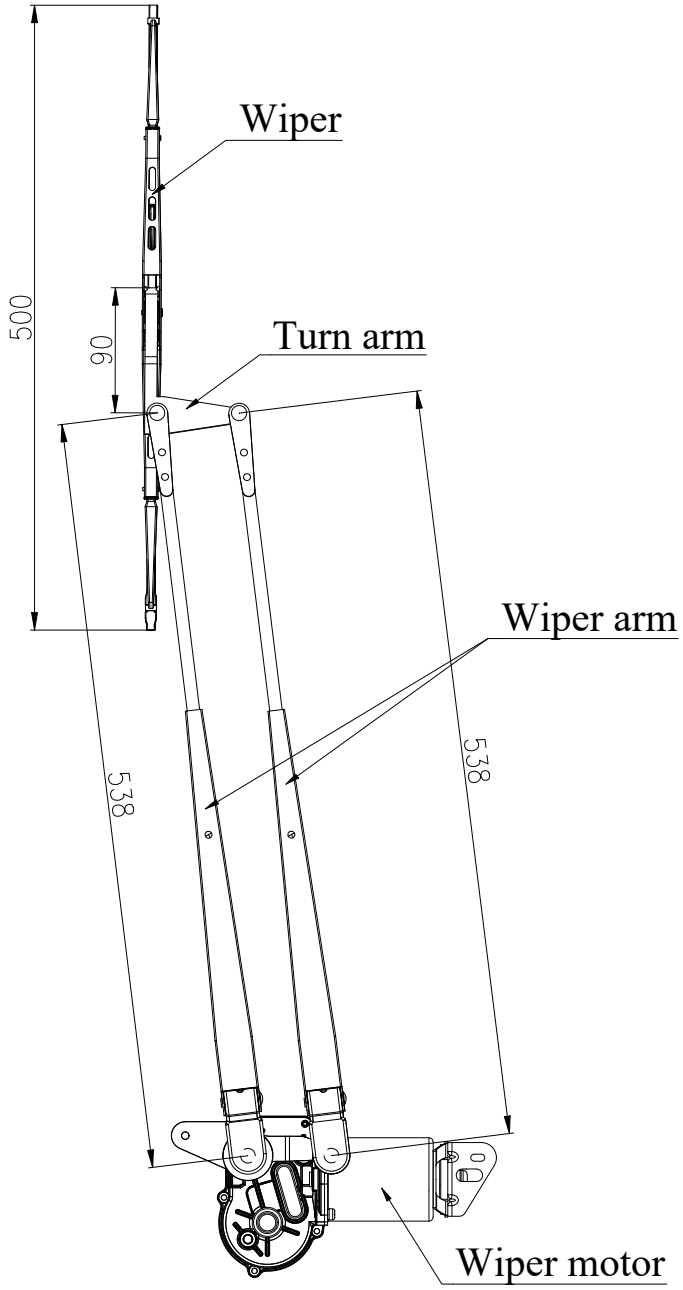

Vehicle Type	TEV
Windscreen wiper	
Drawing No.	TEV-34-01

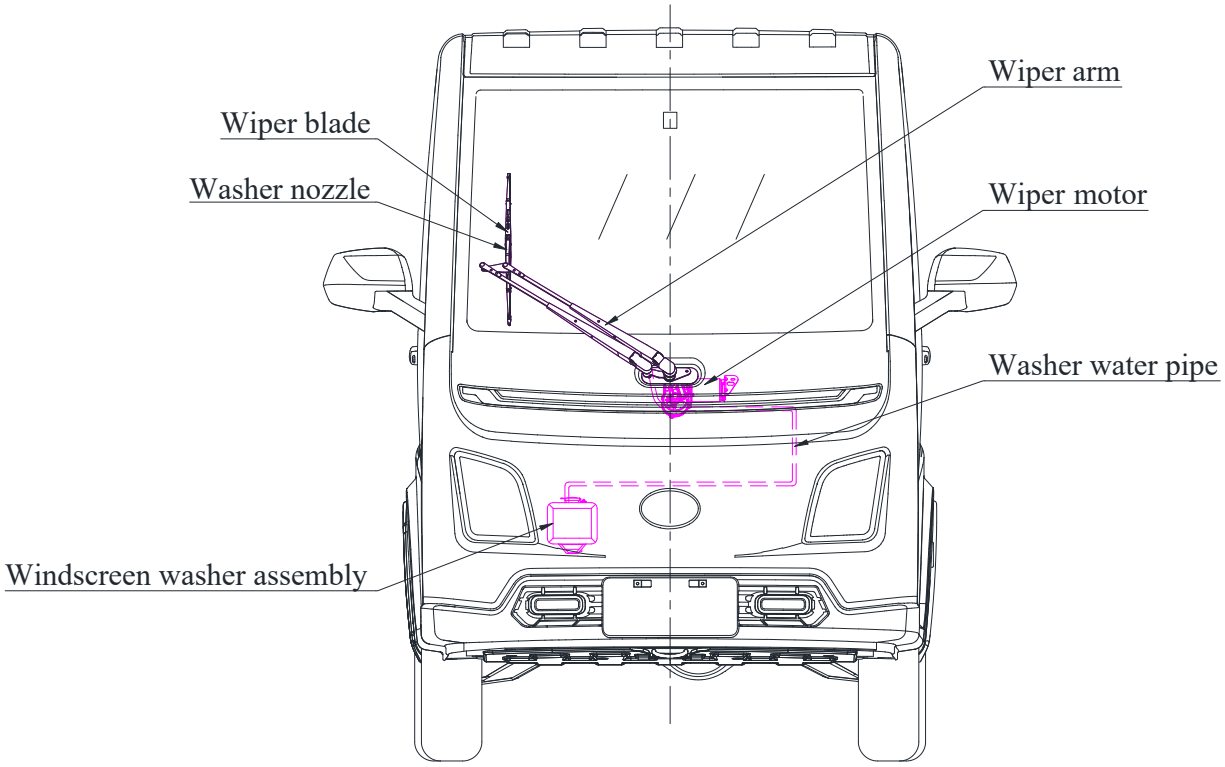

Detail of nozzle:

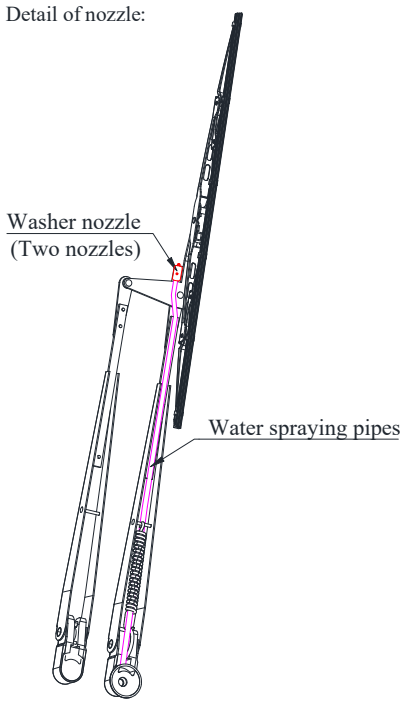

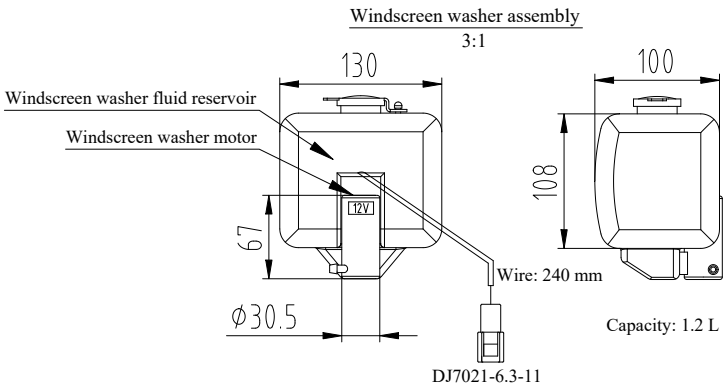

Vehicle Type	TEV
Windscreen washer	
Drawing No.	TEV-35-01

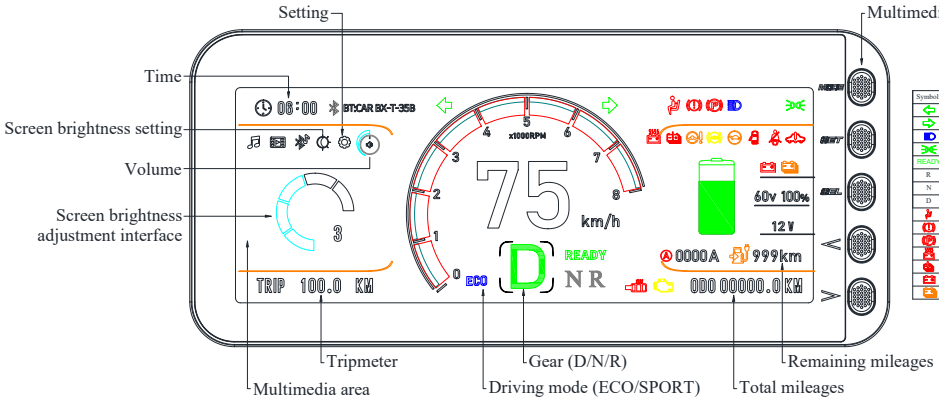

Symbol	Name	Symbol	Name
	Left direction indicator (green)		Steering failure
	Right direction indicator (green)		Anti-lock brake system malfunction (yellow)
	Driving beam (blue)		Limited performance mode
	Position lights (green)		Door(s) ajar
READY	Drive system ready indicator		Seat belt (red)
R	Reverse		Vehicle system failure
N	Neutral (green)		Motor & controller overheating
D	Drive		Malfunction indicator (yellow)
	Leave seat indicator		Ammeter
	Brake failure (red)		Charging socket location and remaining mileage
	Parking brake (red)		MP3
	High temperature of power battery		Video
	Propulsion battery failure		Bluetooth
	Battery charging condition (red)		Bluetooth music
	State of charge propulsion battery		

Rearview mirror adjustment switch

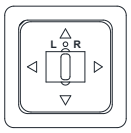

Window lift switch

Hazard warning lamp switch

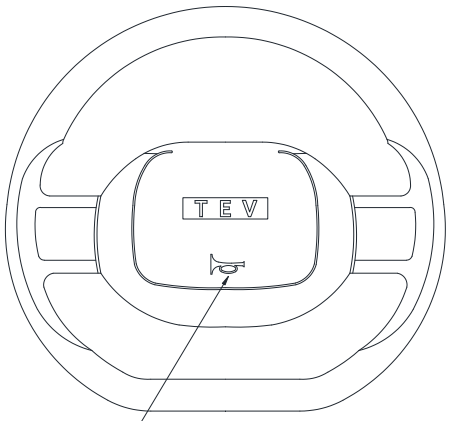

Control panel

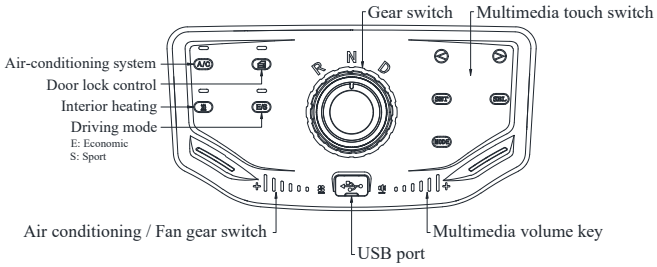

Horn switch

Electric lock

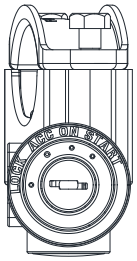

Light combination switch

Combination switch

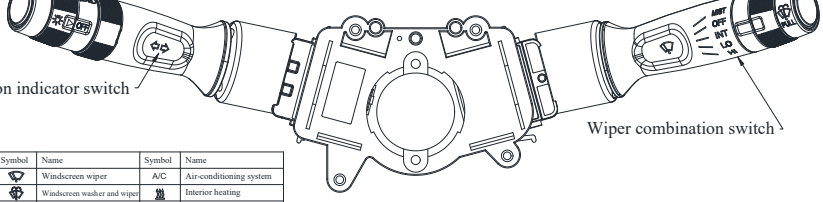

Symbol	Name	Symbol	Name	Symbol	Name
	Master lighting		Windscreen wiper	A/C	Air-conditioning system
	Driving beam		Windscreen washer and wiper		Interior heating
	Passing beam		Window lift, power-operated		Ventilating fan
	Left direction indicator		Hazard warning		Door lock control
	Right direction indicator		Horn		

Vehicle Type	TEV
Controls I.D., tell-tales and indicators	
Drawing No.	TEV-36-01

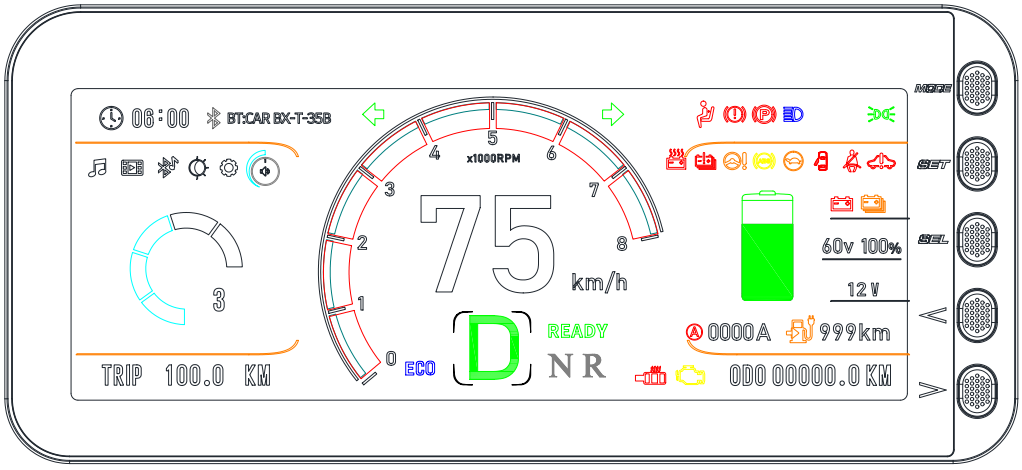

The speedometer has metric and imperial units, metric mode and imperial mode can be switched freely.
Imperial mode can be selected through the instrument set key.
When metric mode is selected, speed displays in km/h, mileage display in km;
When imperial mode is selected, speed displays in mph, mileage display in miles;

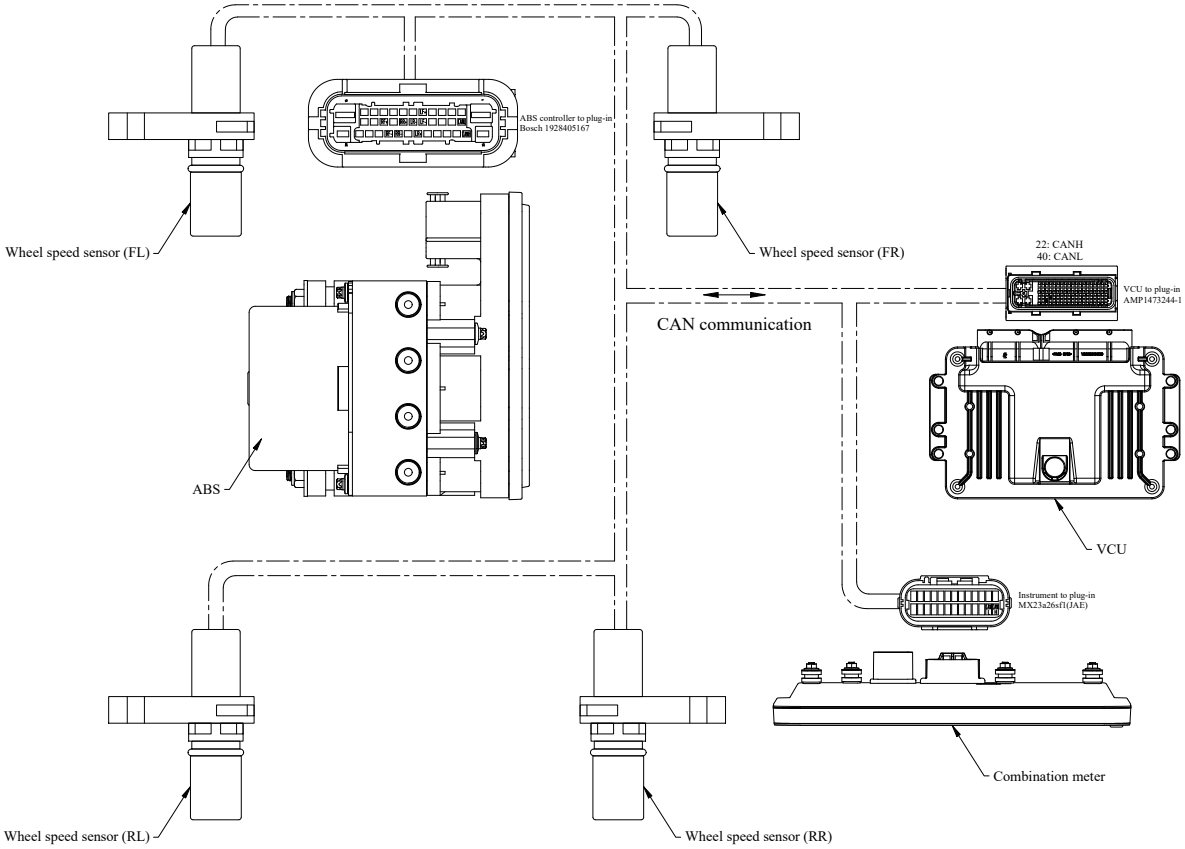

Vehicle Type	TEV
Complete speedometer system	
Drawing No.	TEV-37-01

Lamp function		QTY.	Color	Tell-tale	Max. intensity	Make	Type	Approval mark
Daytime running lamp		2	white	/	/		A6	RL E57 148R00 1780
Head lamp	Driving beam	2	white	Blue	27649.62 cd	XN	XN-JMTEV-QZD	WCR-CS PL MA 11b E57 7.5 149R00 148R00 1161
	Passing beam			/	/			
Front position lamp		2	White	Green	/			
Front direction indicator lamp		2	Amber	Green	/			
Rear direction indicator lamp		2	Amber	Green	/		JM1500DZK-2002100/ JM1500DZK-2002200/ BH433DZK1001A0/ BH433DZK1002A0	12 E32 50R-000115
Stop lamp		2	Red	/	/			E32 50R-000115
Rear position lamp		2	Red	Green	/			
Reversing lamp		2	White	/	/			AR 00 E32 0115
Rear registration plate lamp		2	White	/	/	振ZHENHE鹤	ZH-1-15	L 01 E57 0005
Side reflector		2	Amber	/	/	K-LITE, KYI, HILUX K-LITE	KM101	IA E4 023298
Rear reflector		2	Red	/	/	KYI, K-LITE	KM-210	IA E4 02.3327

Vehicle Type	TEV
List of lighting and light-signalling devices	
Drawing No.	TEV-38-01

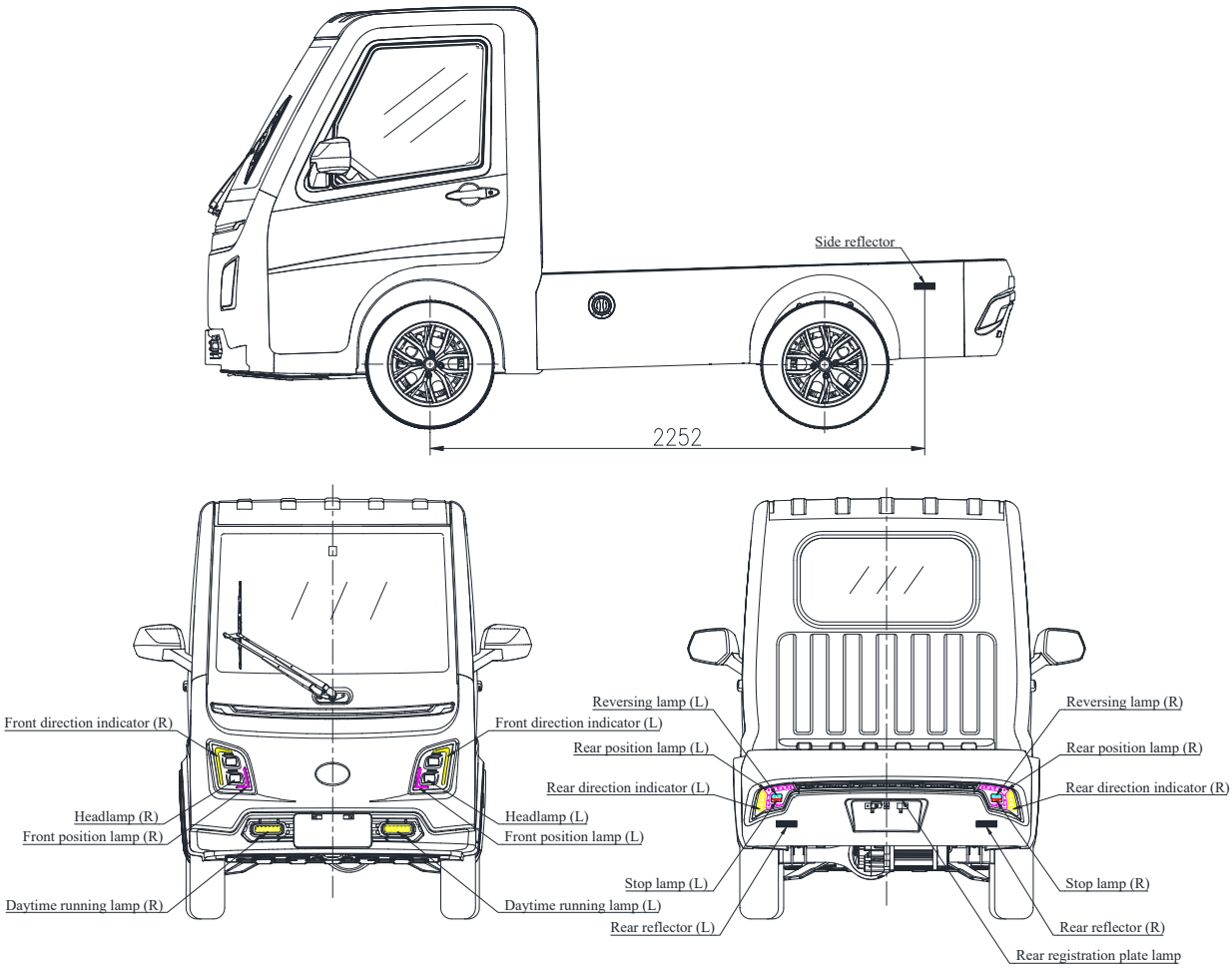

Devices	Height (mm)		Luminous surface distance (mm)		Luminous surface to outermost distance (mm)
	Min.	Max.	Min.	Max.	
Daytime running lamp	340	370	500	740	N.A.
Headlamp driving beam	570	685	825	1020	N.A.
Headlamp passing beam	570	685	825	1020	190
Front position lamp	540	630	775	895	252.5
Front direction indicator lamp	570	730	935	1090	155
Rear direction indicator lamp	505	605	1115	1160	120
Stop lamp	550	570	930	1055	N.A.
Rear position lamp	515	640	820	1110	145
Reversing lamp	575	590	930	1055	N.A.
Rear registration plate lamp	565	N.A.	N.A.	N.A.	N.A.
Side reflector	615	635	N.A.	N.A.	N.A.
Rear reflector	445	475	820	1005	197.5

Vehicle Type	TEV
Lighting installation	
Drawing No.	TEV-39-01

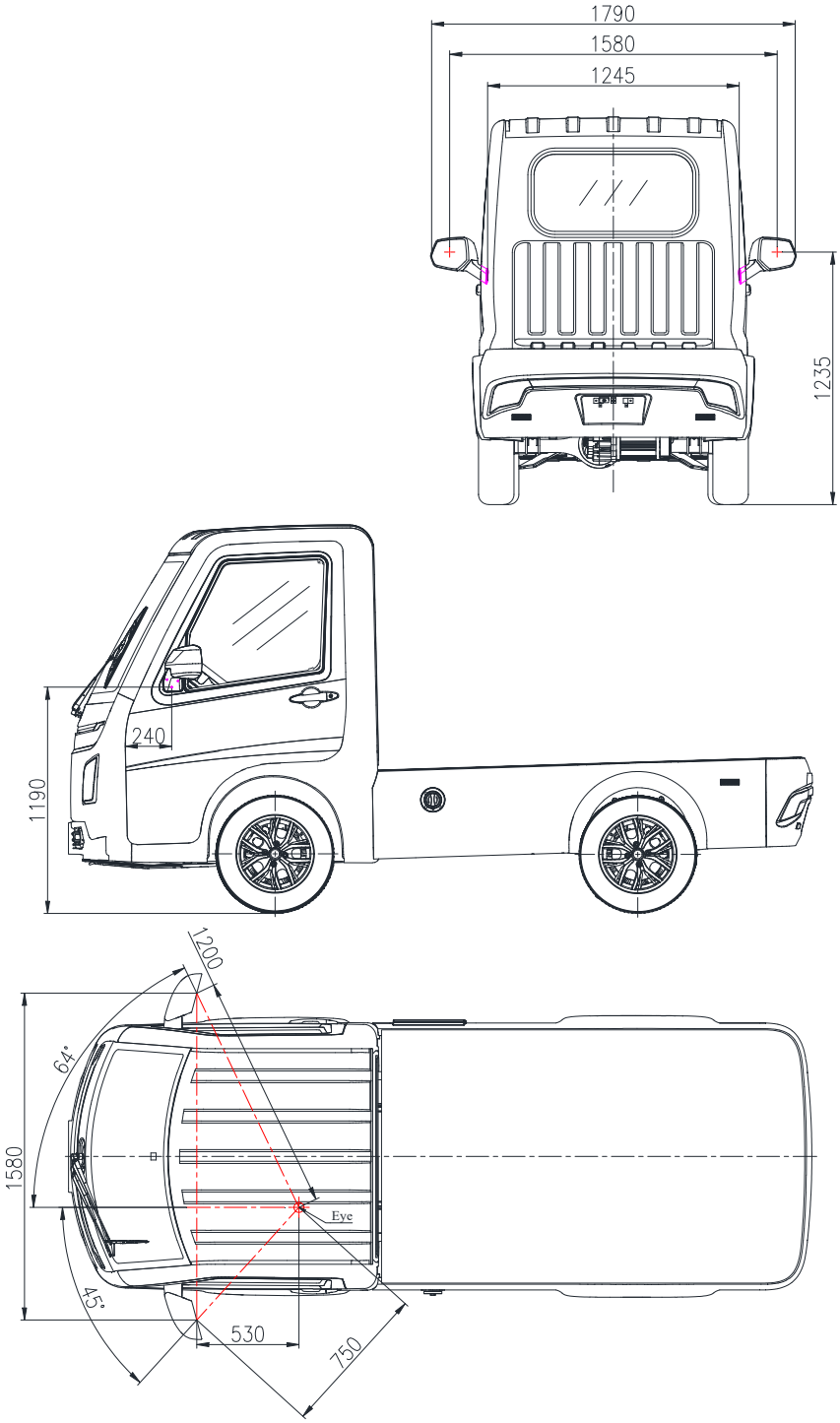

Vehicle Type	TEV
Rear-view mirror position	
Drawing No.	TEV-40-01

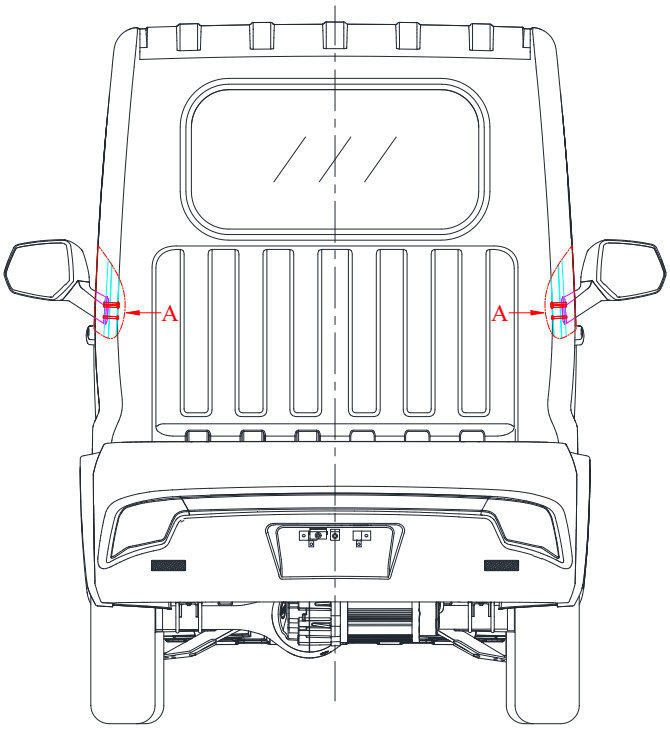

A
3:1

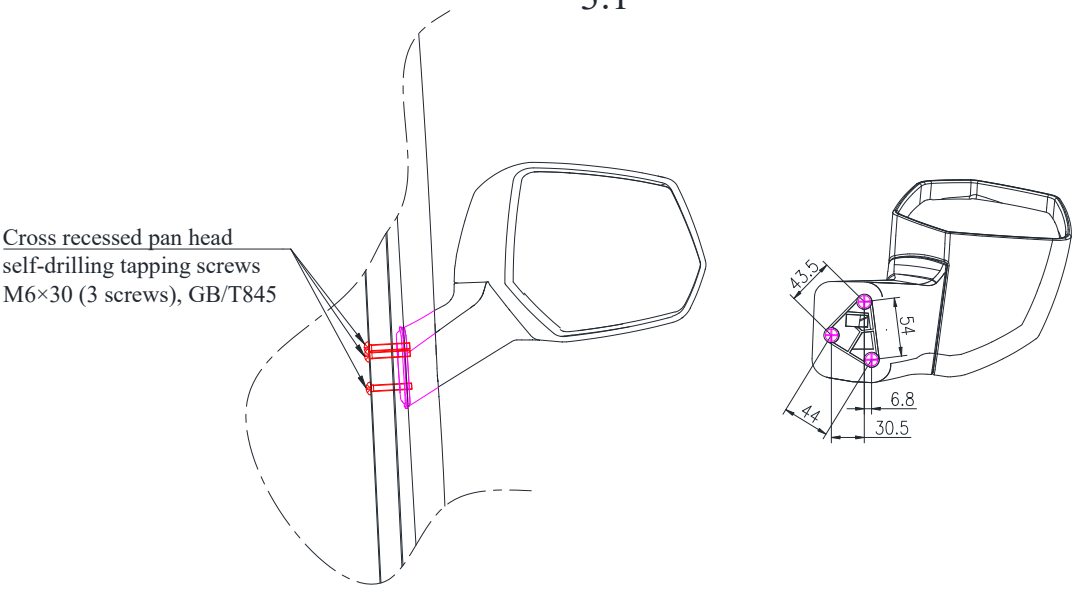

Vehicle Type	TEV
Rear-view mirror installation	
Drawing No.	TEV-41-01

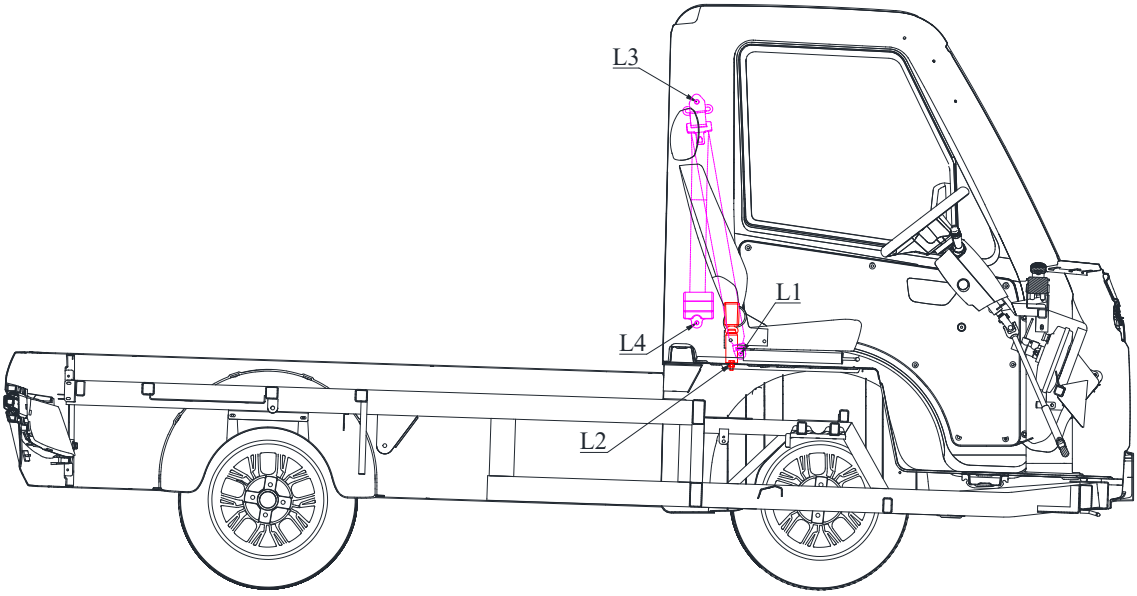

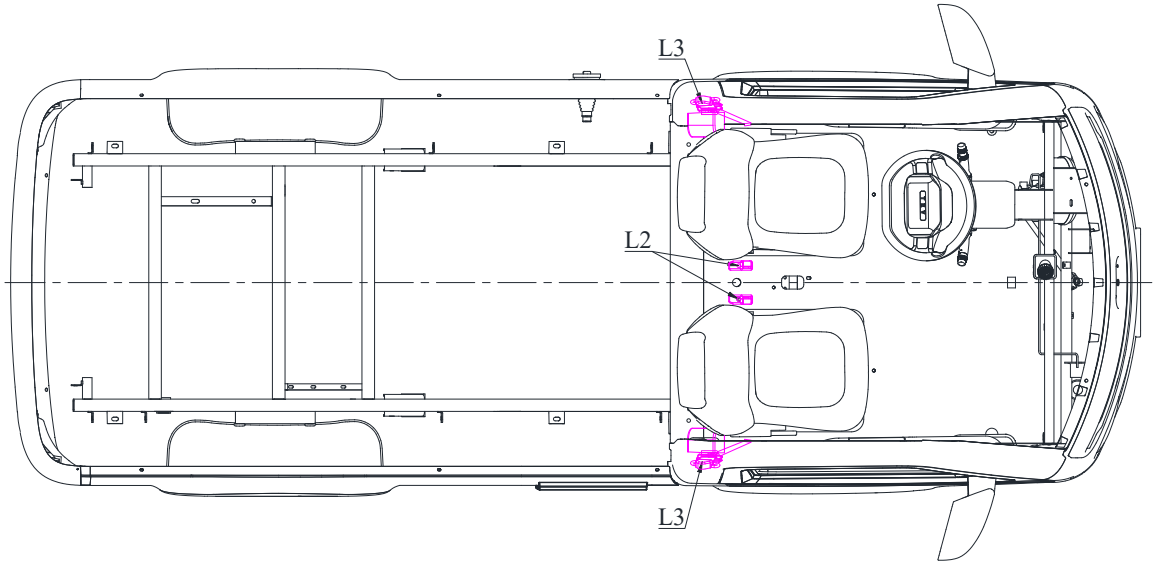

	Driver's seat (left seat)			Passenger's seat (right seat)		
Item	x	y	z	x	y	z
L1: Lower anchorage point	260	540	745	260	-540	745
L2: Buckle anchorage point	270	55	720	270	-55	720
L3: Upper anchorage point of pillar loop	400	580	1570	400	-580	1570
L4: Retractor anchorage point	400	580	850	400	-580	850
R point: x165, y280, z995 (a1: 69°, a2: 69°)						

x-Horizontal distance (mm) from the front most axles (preceded by '-' if located in front of the front axle)
y-Horizontal distance (mm) from the longitudinal center line of the vehicle (preceded by '-' if located on the right side of the vehicle)
z-Distance (mm) from the ground

Vehicle Type	TEV
Safety belt anchorages	
Drawing No.	TEV-42-01

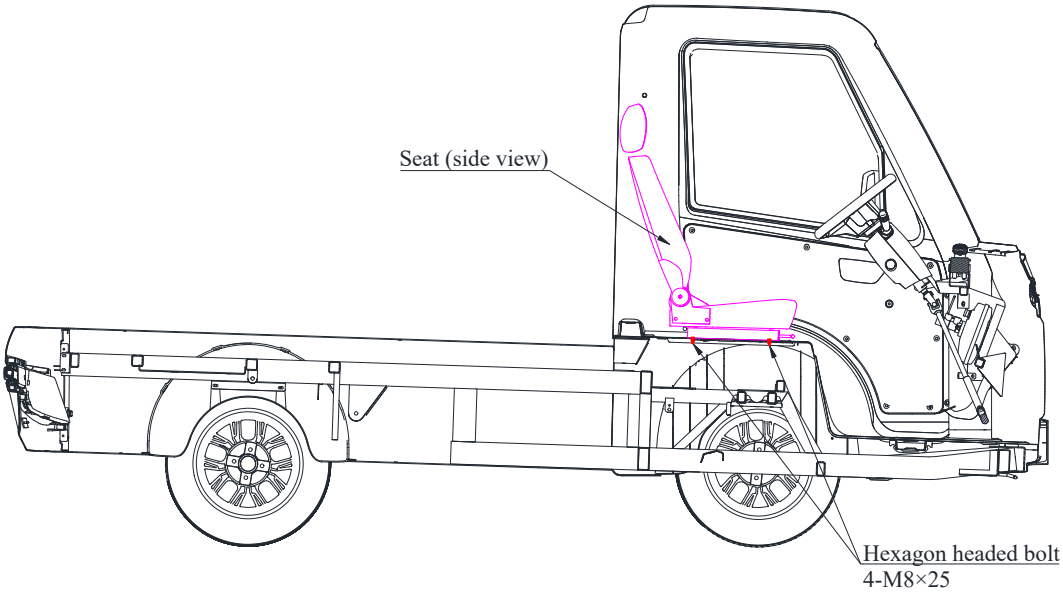

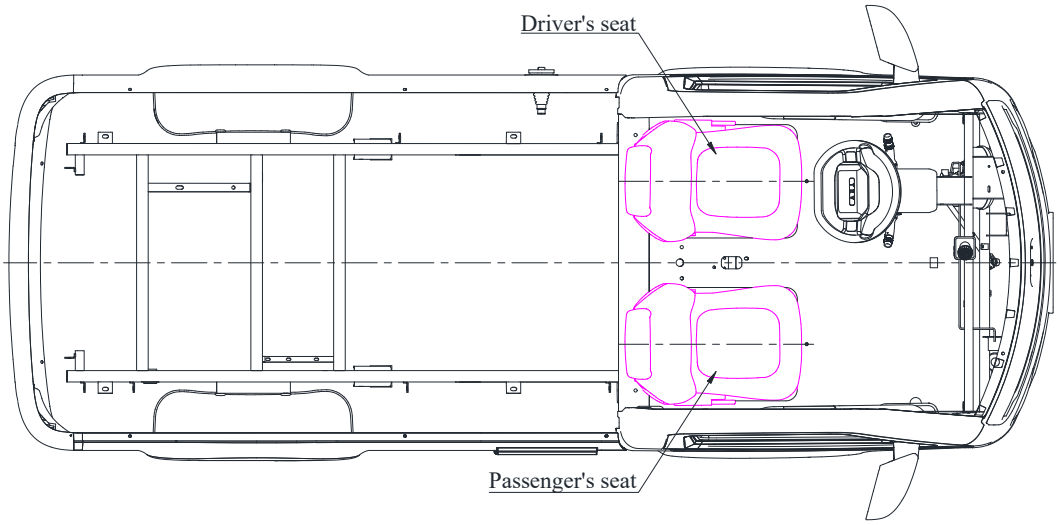

Vehicle Type	TEV
Location and arrangement of seating position	
Drawing No.	TEV-43-01

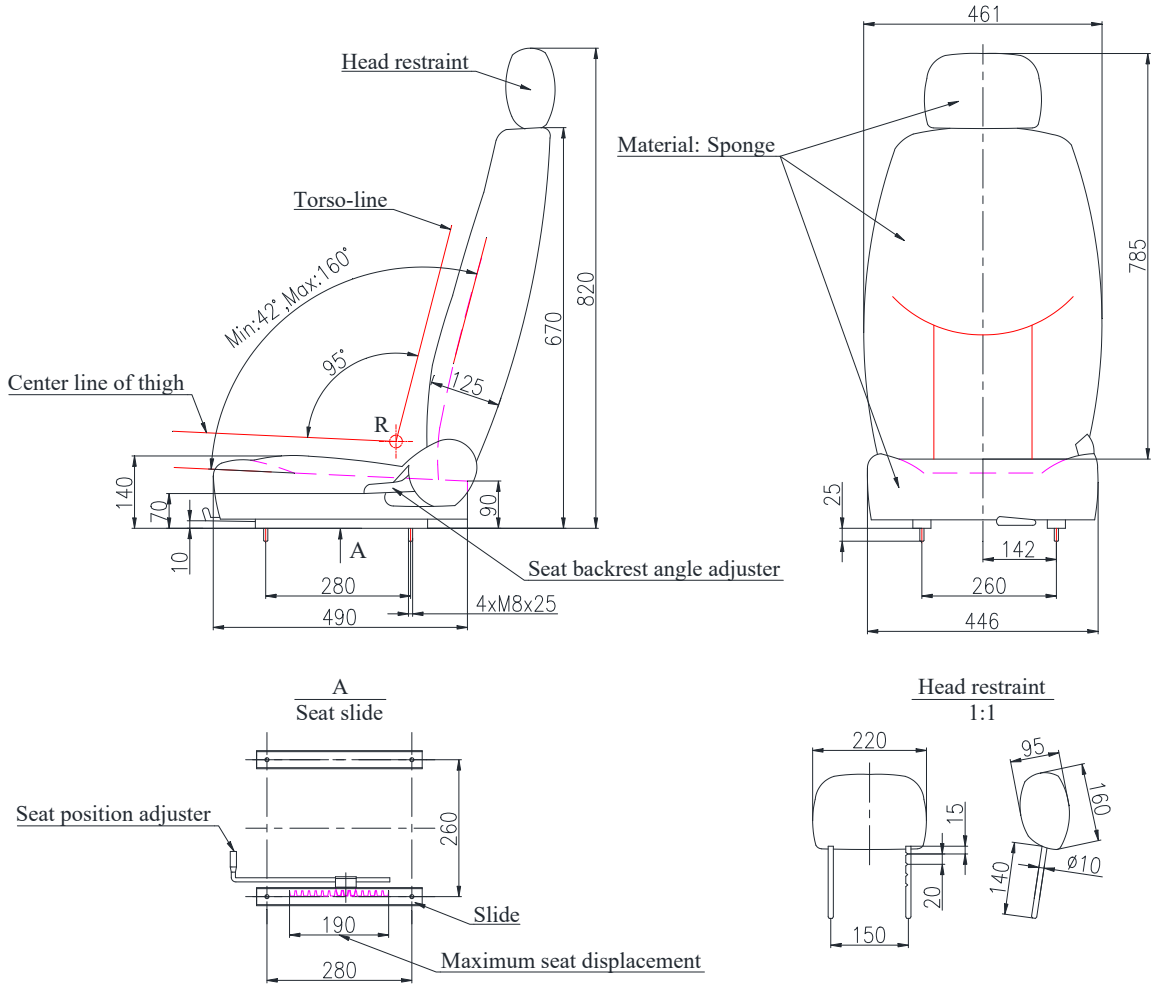

Mass of single seat: 10 kg

Vehicle Type	TEV
Details of seat and head restraint	
Drawing No.	TEV-44-01

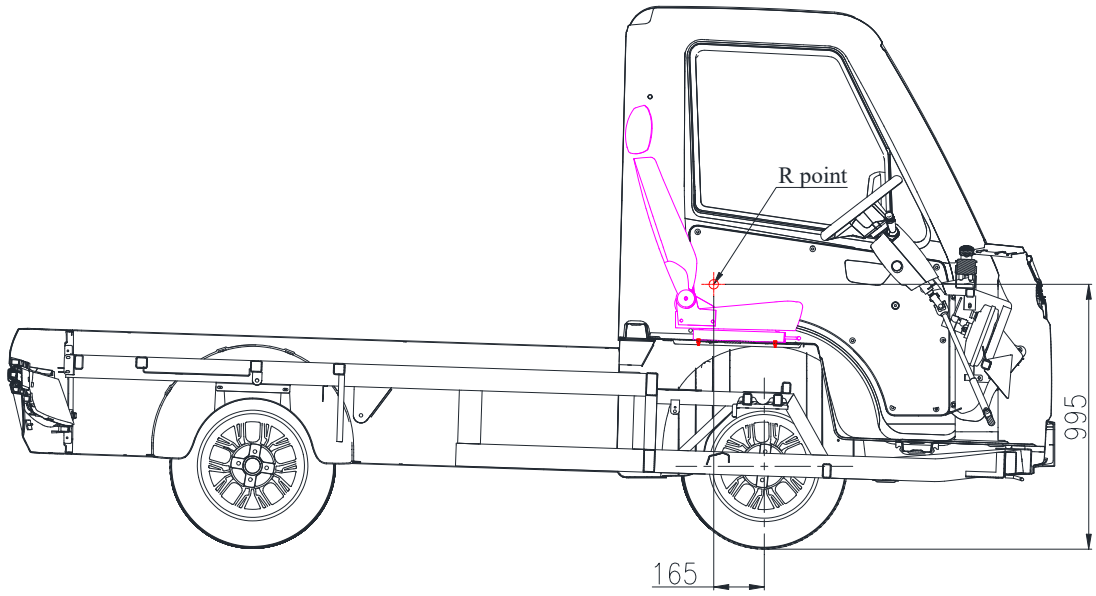

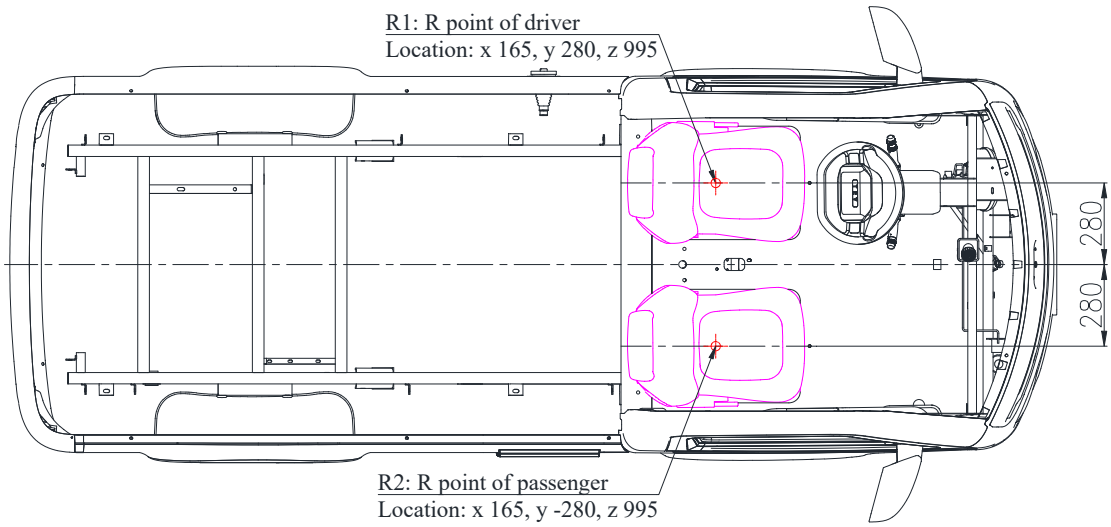

x-Horizontal distance (mm) from the front most axles (preceded by '-' if located in front of the front axle)
y-Horizontal distance (mm) from the longitudinal center line of the vehicle (preceded by '-' if located on the right side of the vehicle)
z-Distance (mm) from the ground

Vehicle Type	TEV
R-point of all seats	
Drawing No.	TEV-45-01

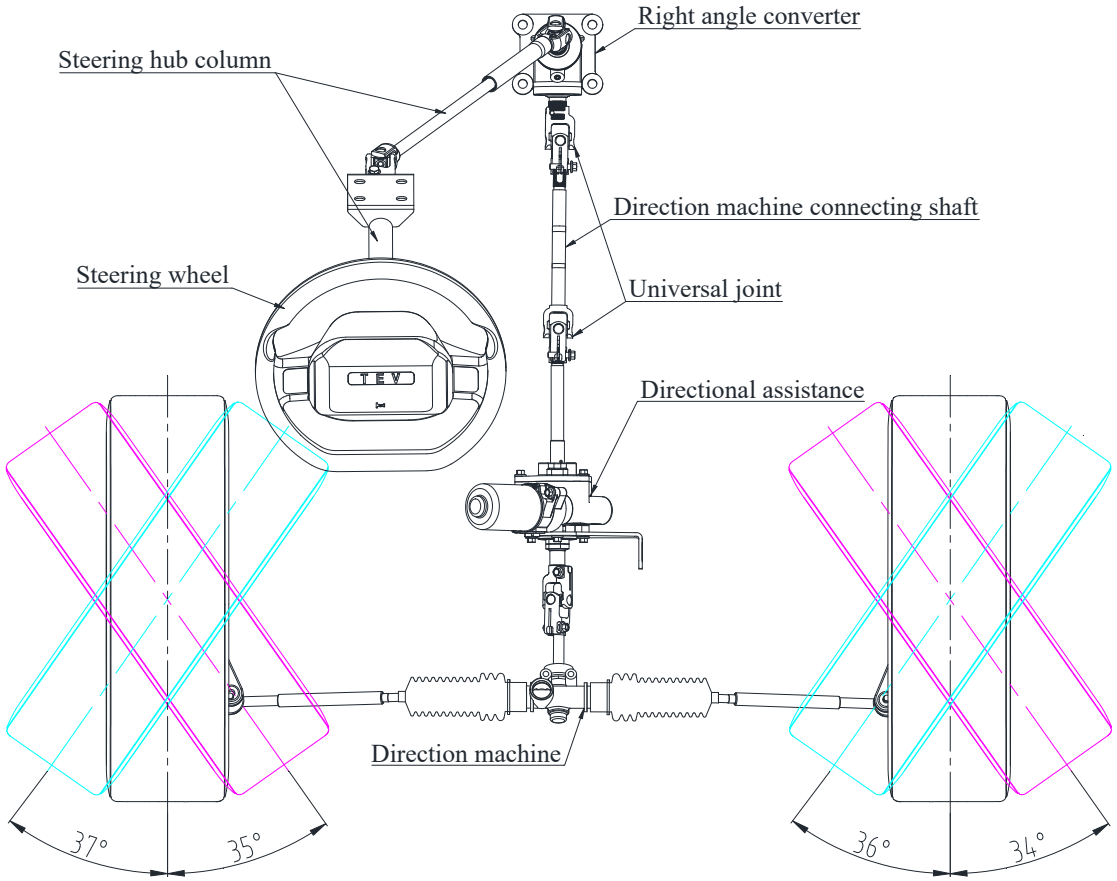

Steering wheel

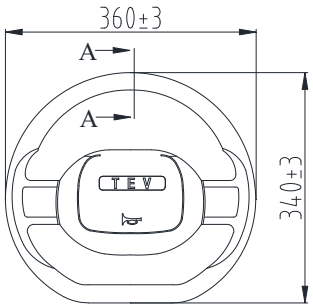

A-A
(2:1)

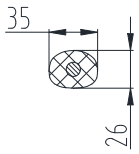

Vehicle Type	TEV
Steering geometry	
Drawing No.	TEV-46-01

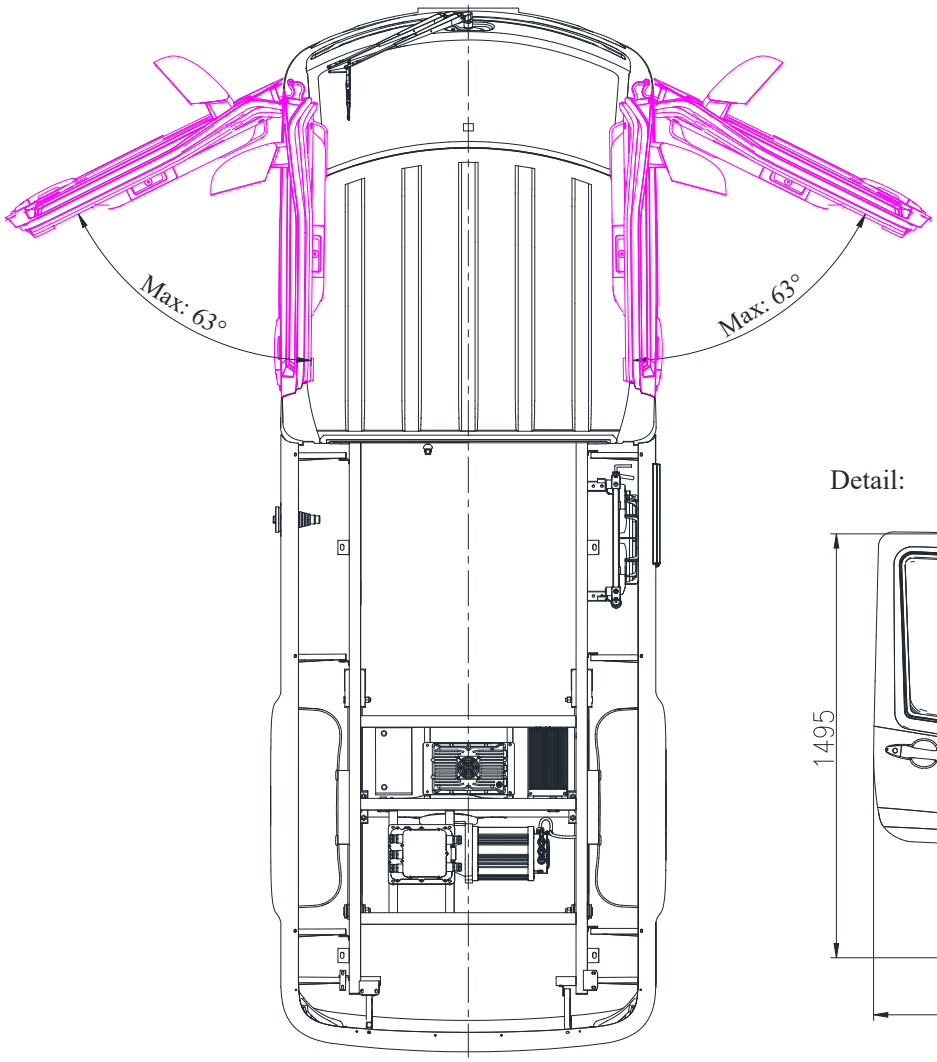

Detail:

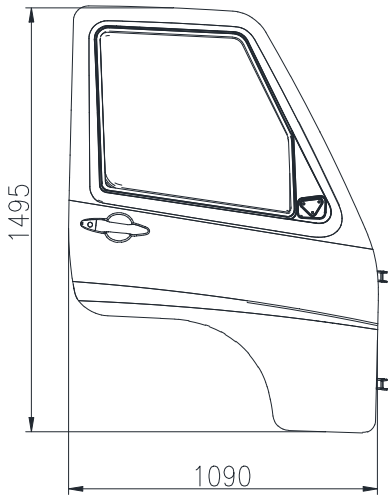

Vehicle Type	TEV
Doors	
Drawing No.	TEV-47-01

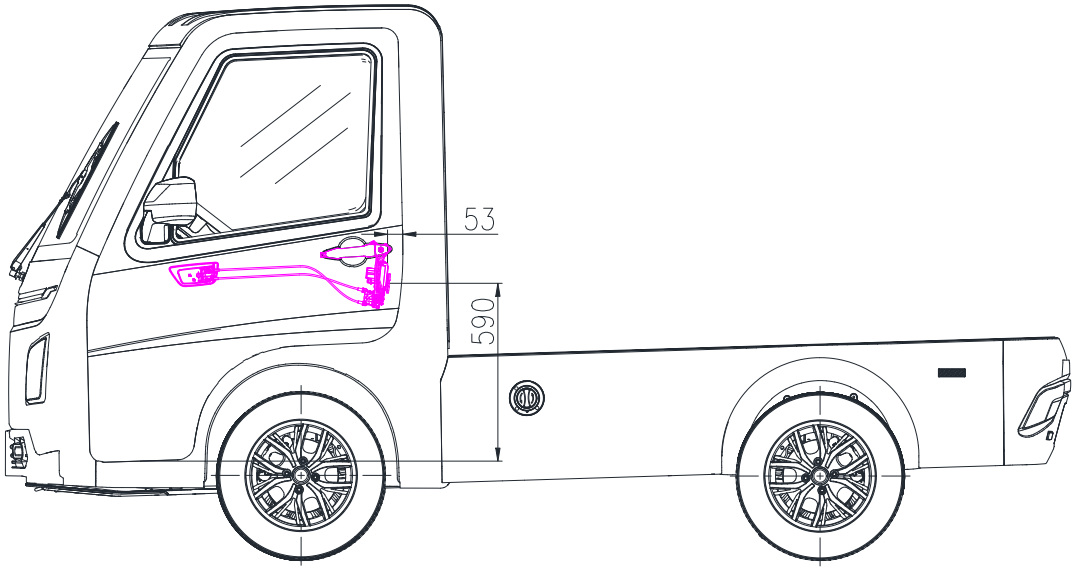

Lock device
2:1

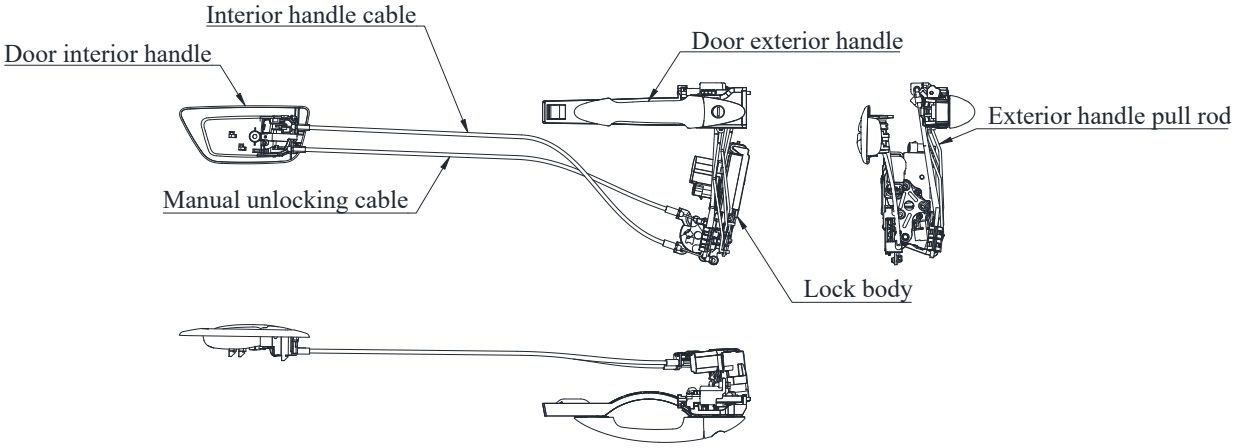

Vehicle Type	TEV
Latches	
Drawing No.	TEV-48-01

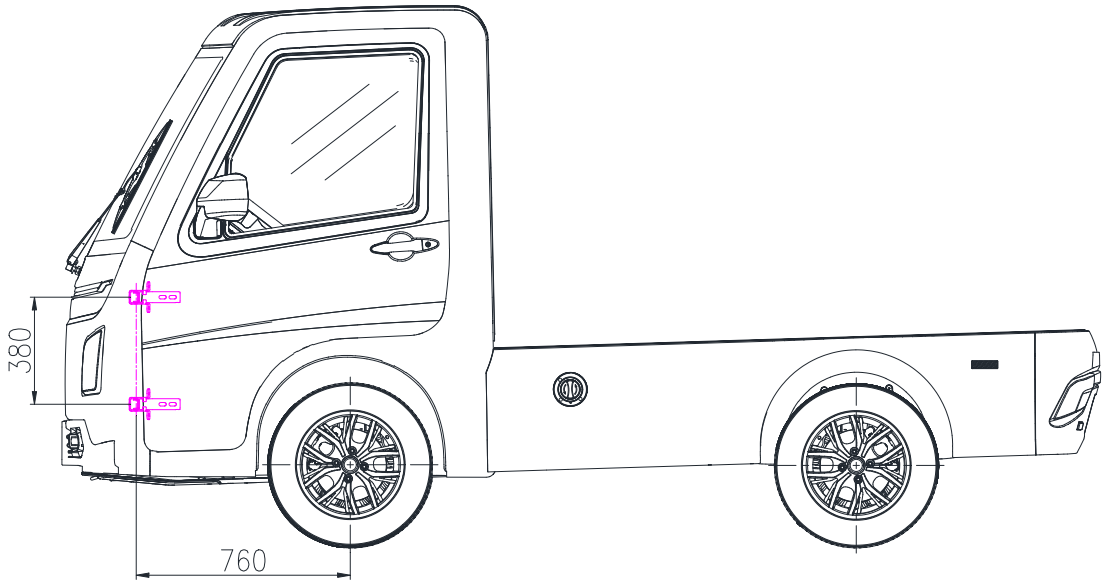

Door hinge
5:1

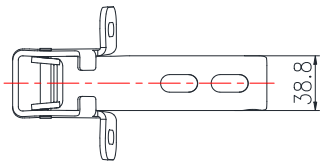

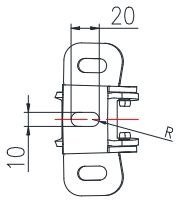

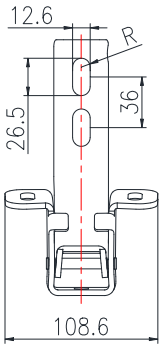

A direction

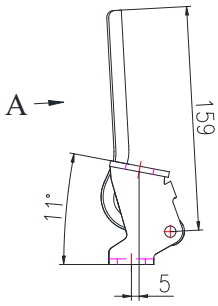

Vehicle Type	TEV
Hinges	
Drawing No.	TEV-49-01

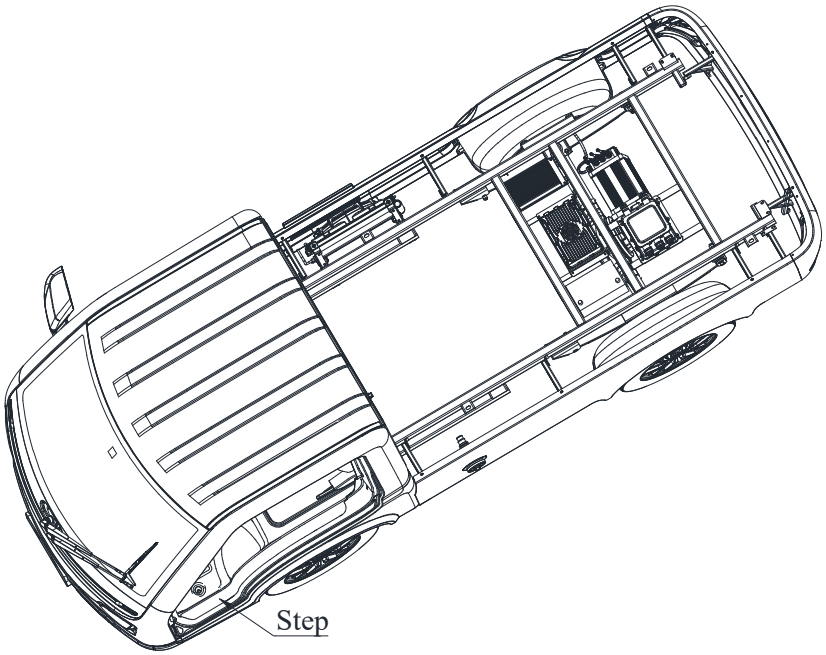

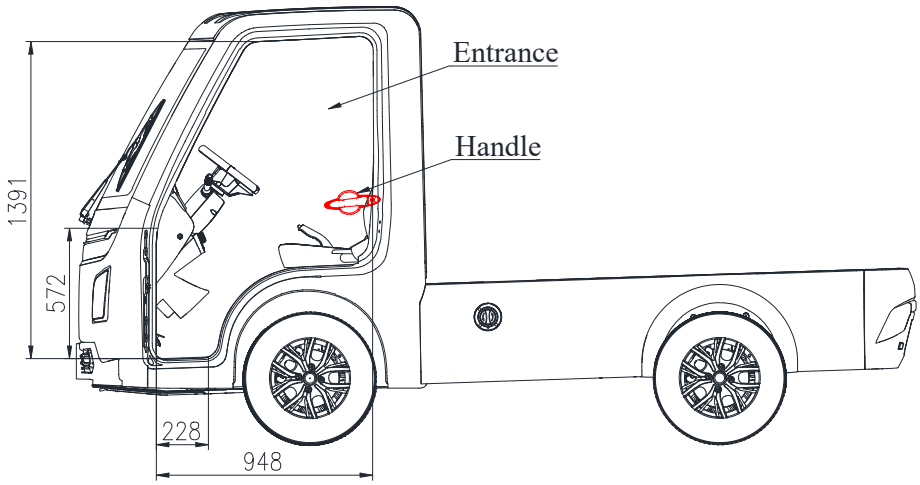

Vehicle Type	TEV
Details of entrances, steps and handles	
Drawing No.	TEV-50-01

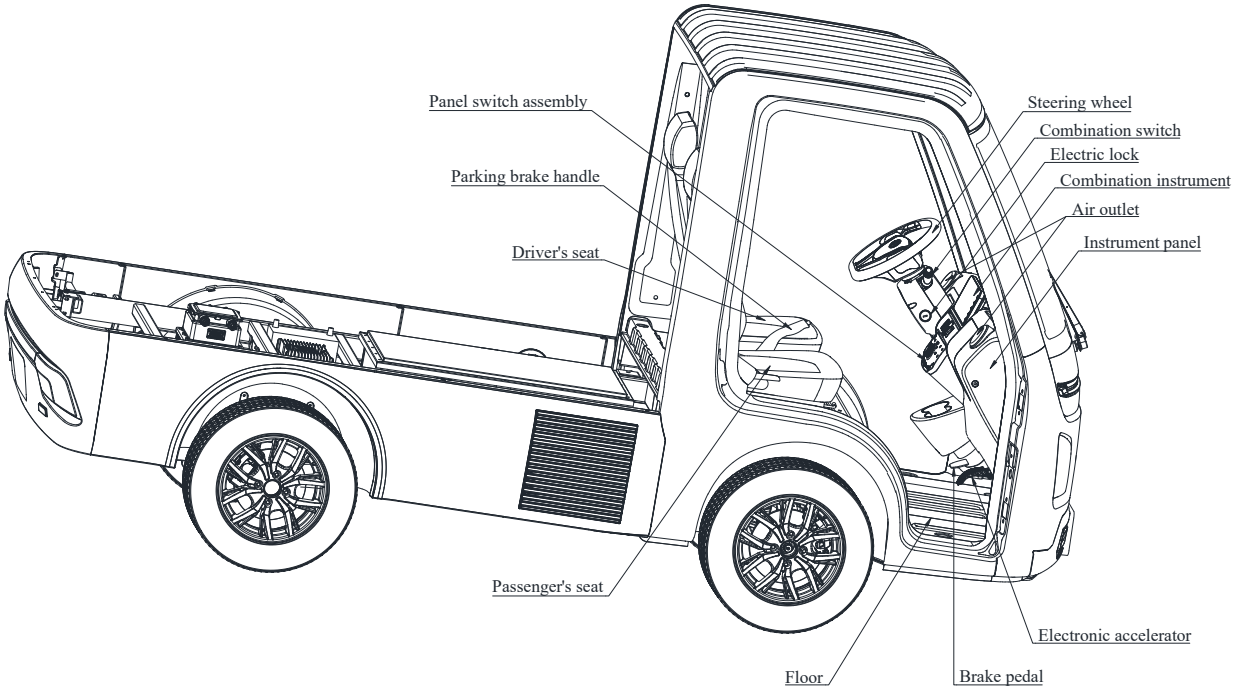

Material of seat: Sponge & leather
Material of interior panel, door backplate, instrument pane, floor and seat box decorative panel: PP plastic

Vehicle Type	TEV
View of the interior fittings	
Drawing No.	TEV-51-01

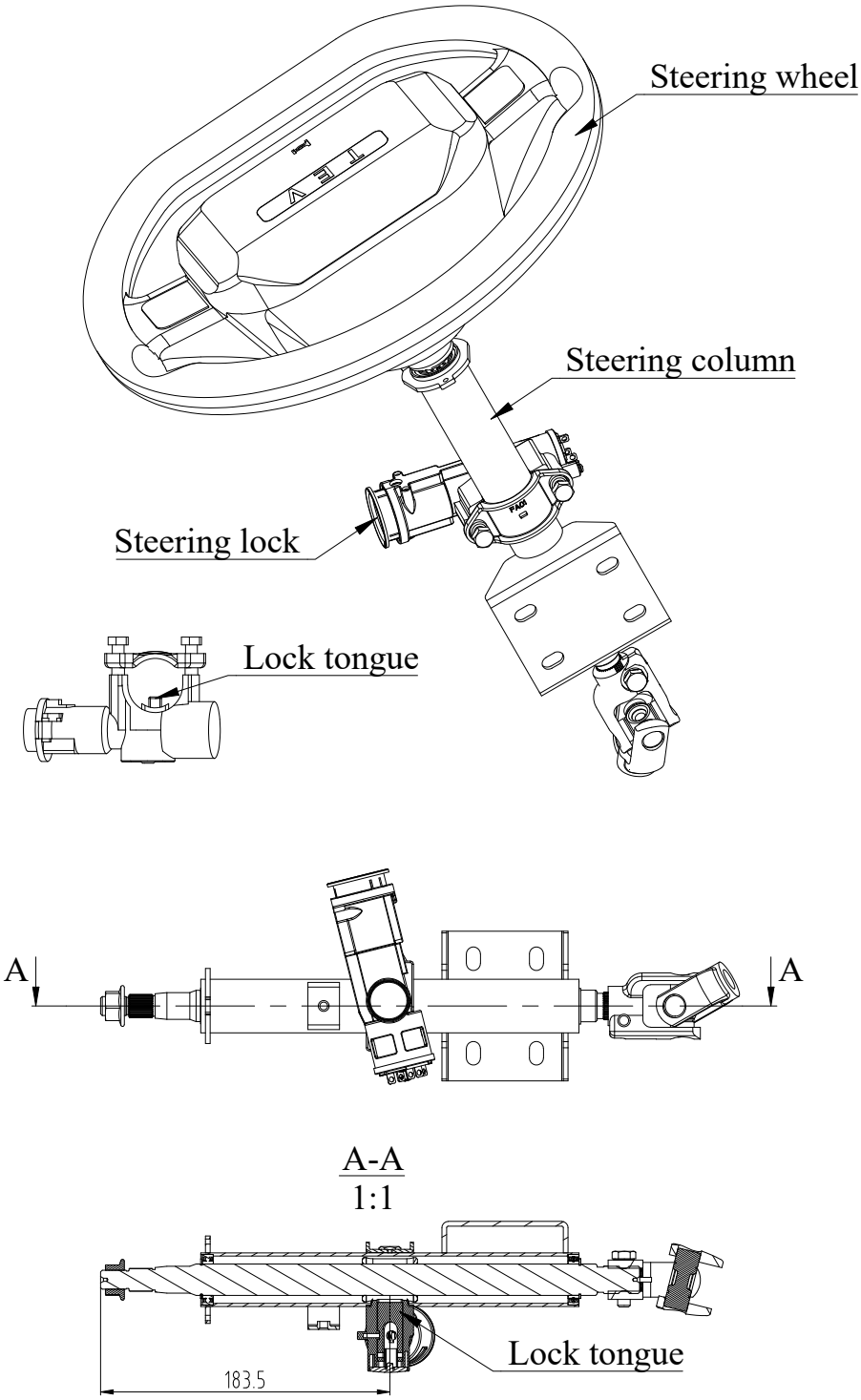

Vehicle Type	TEV
Protective device	
Drawing No.	TEV-52-01

For Version 00, with basic configuration

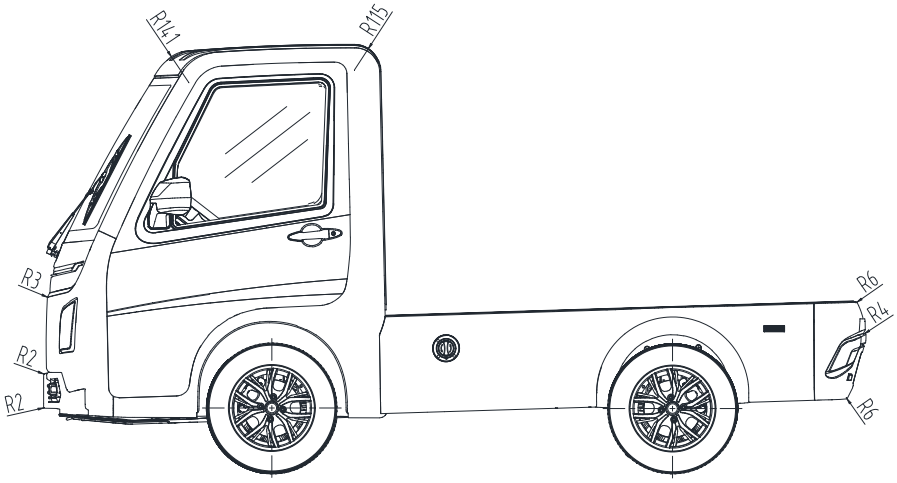

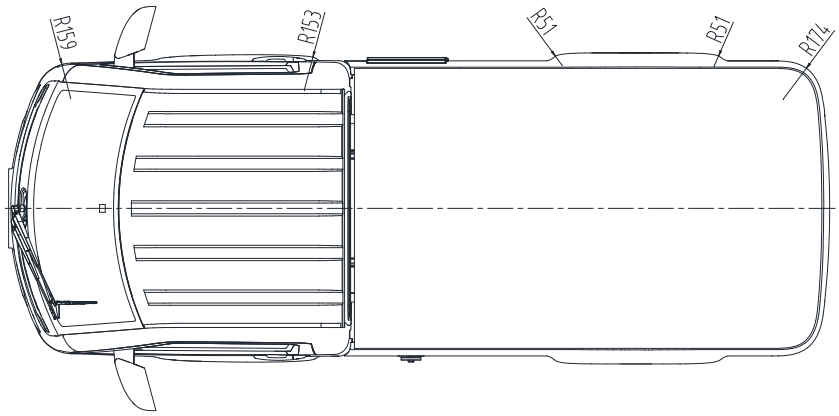

Vehicle Type	TEV
External projections (1)	
Drawing No.	TEV-53-01

For Version 01, with small load platform

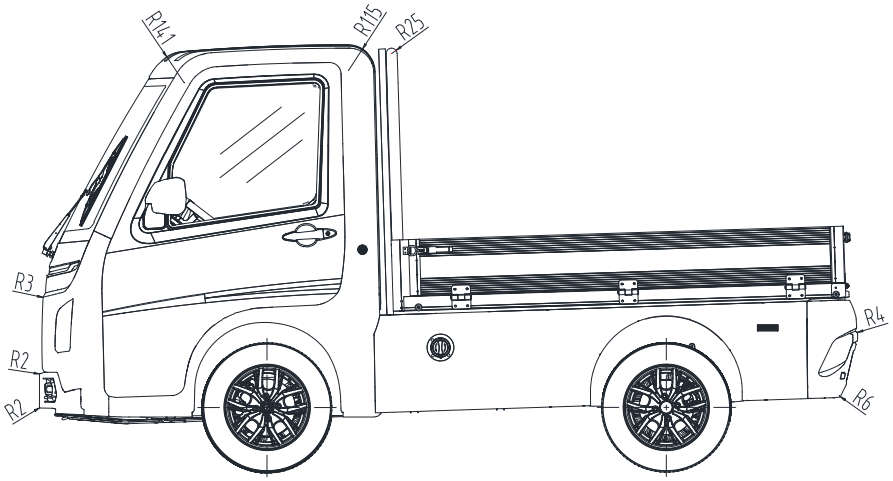

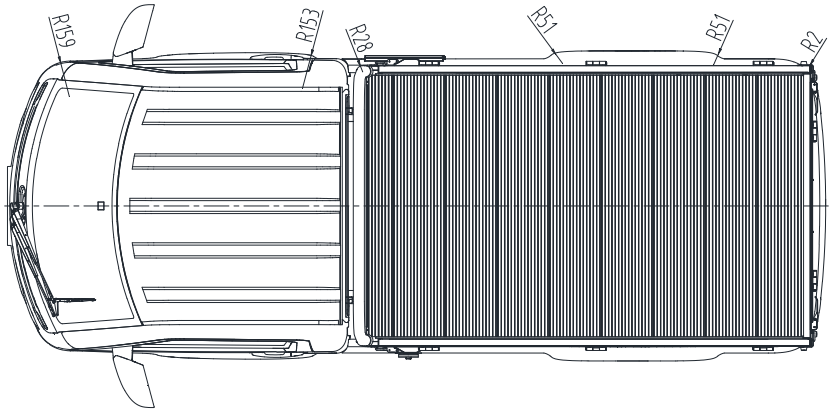

Vehicle Type	TEV
External projections (2)	
Drawing No.	TEV-53-02

For Version 02, with big load platform

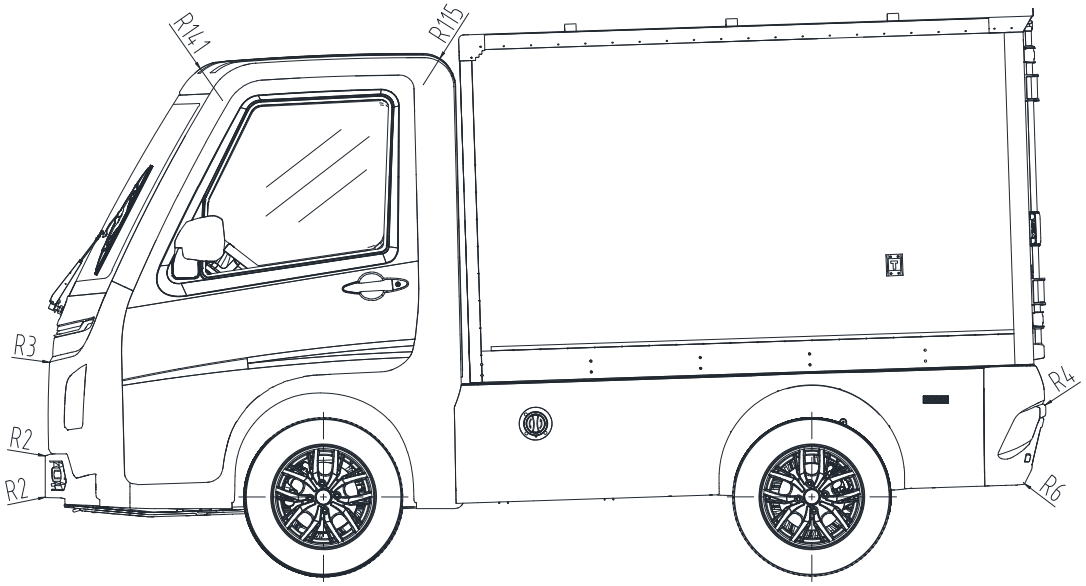

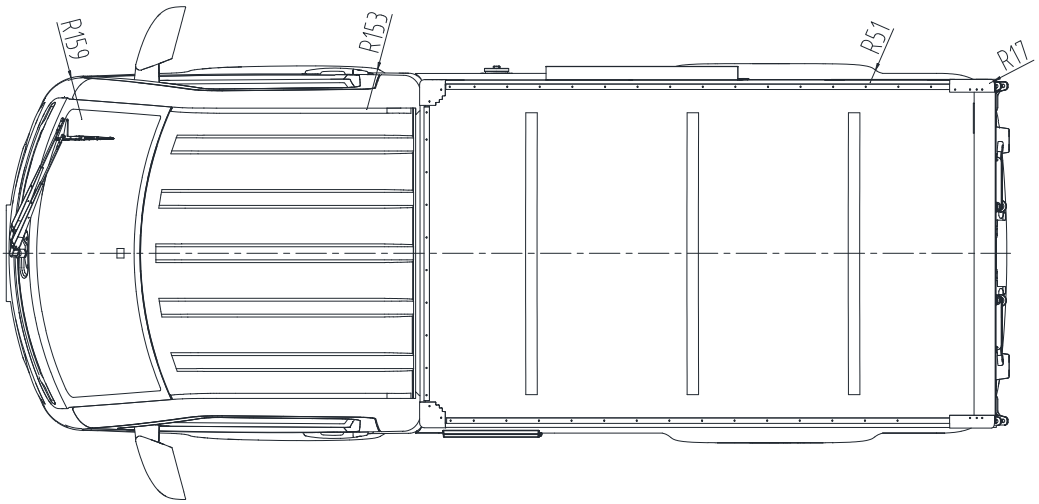

Vehicle Type	TEV
External projections (3)	
Drawing No.	TEV-53-03

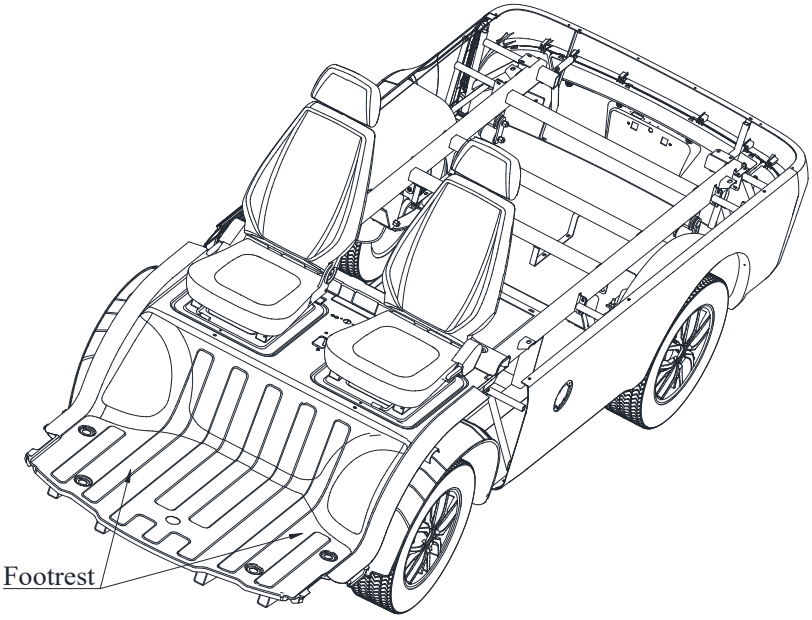

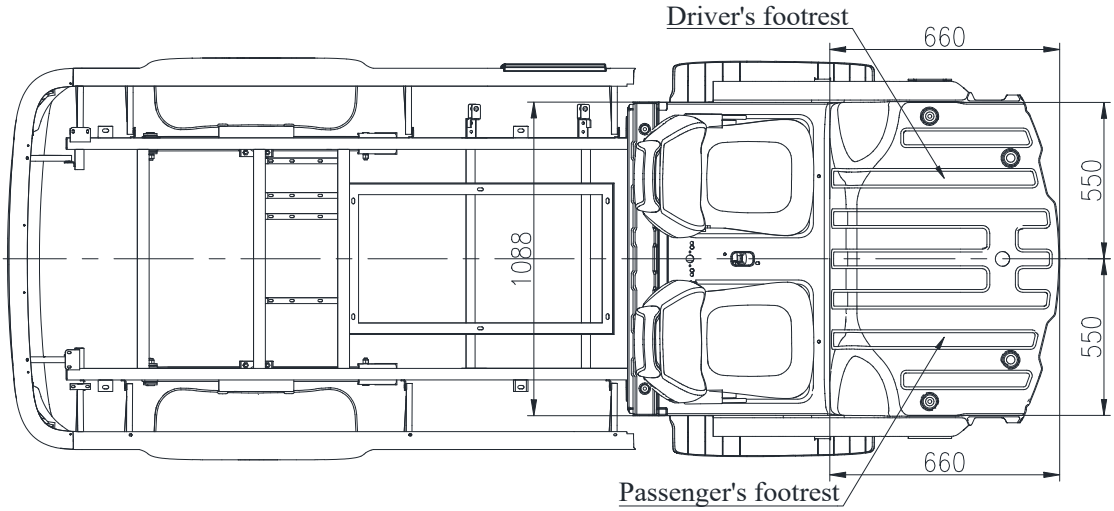

Vehicle Type	TEV
Construction and location of footrest	
Drawing No.	TEV-54-01

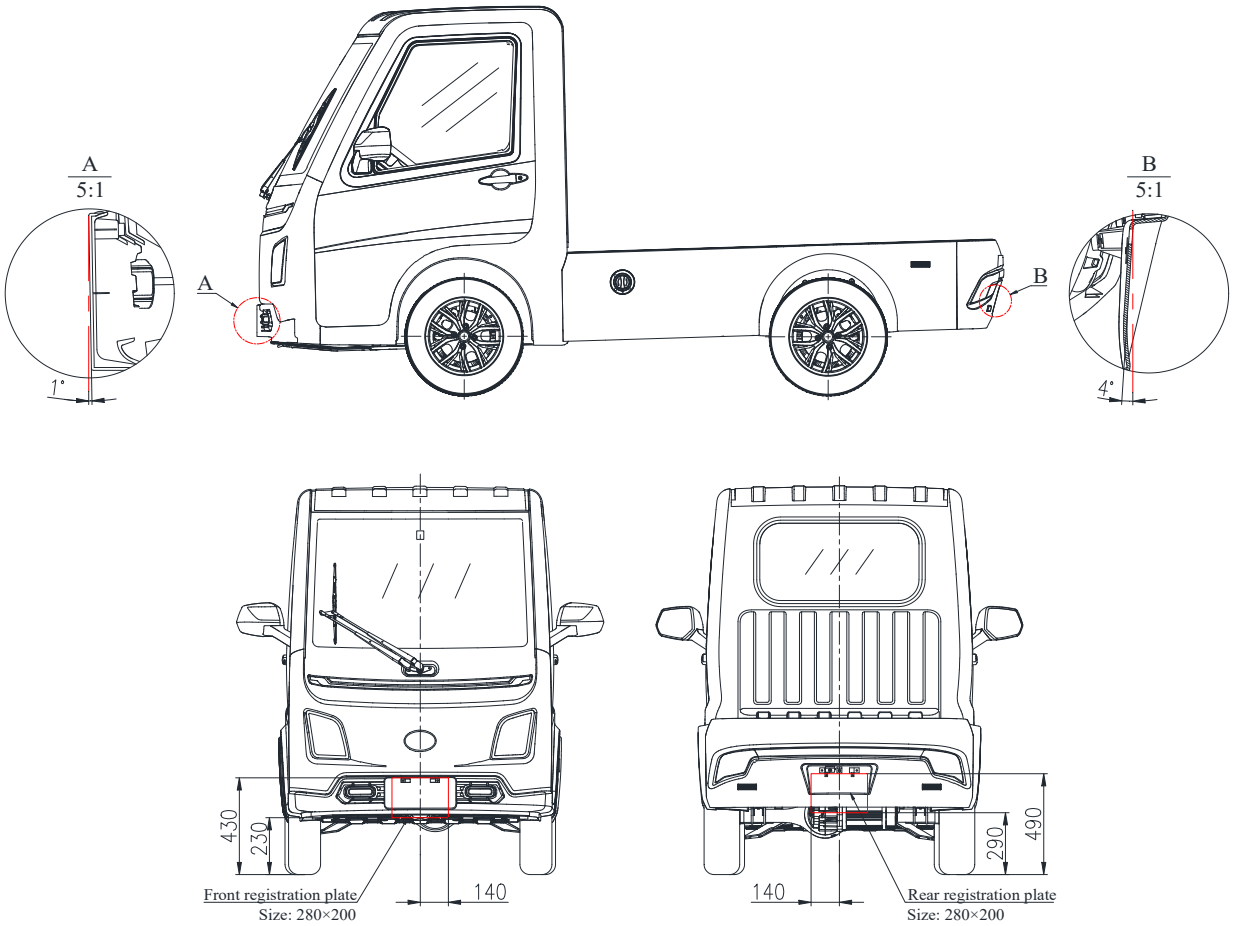

Vehicle Type	TEV
Mounting space for registration plate	
Drawing No.	TEV-55-01

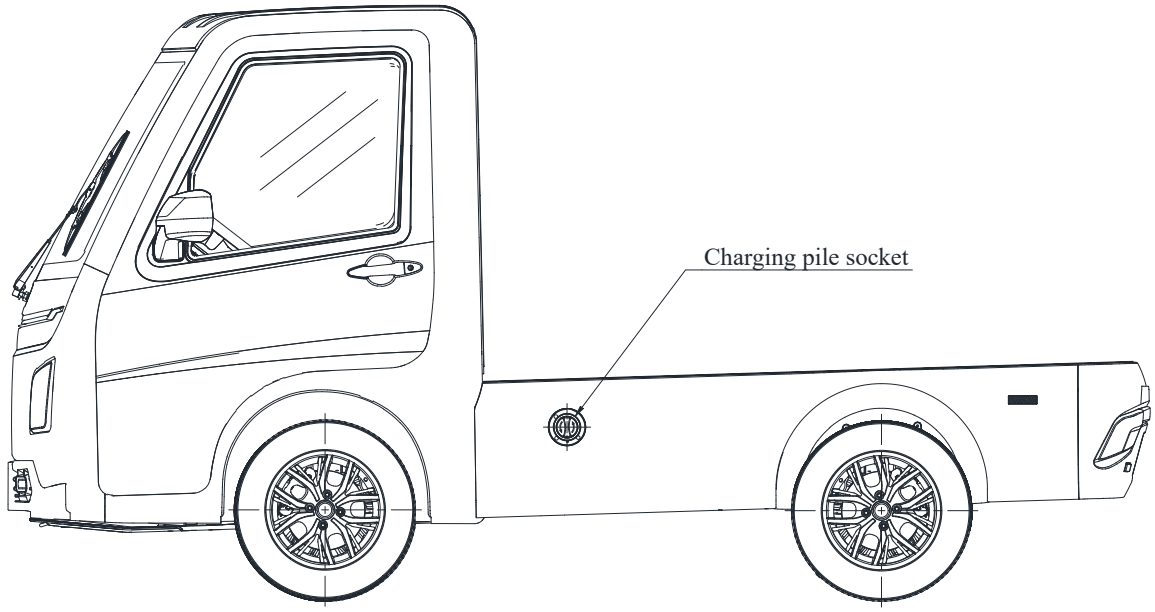

Charging pile socket:

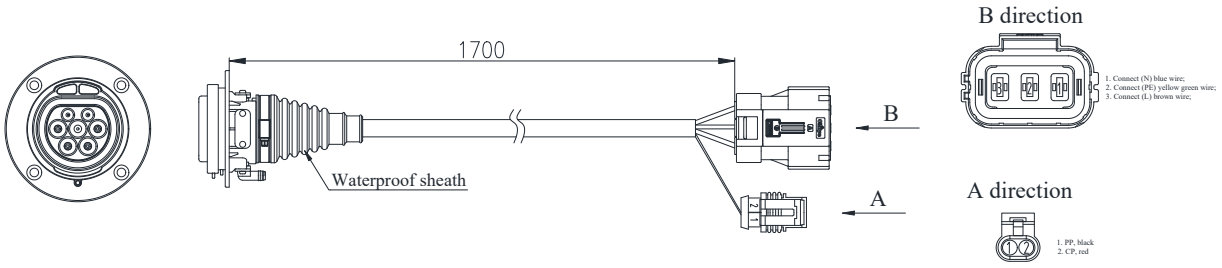

Vehicle Type	TEV
Location and detail of charging interface	
Drawing No.	TEV-56-01

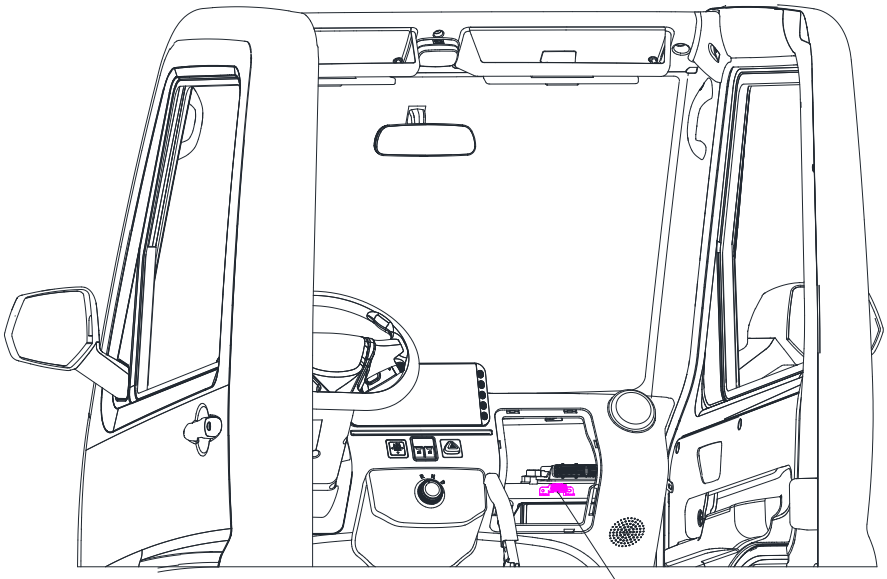

OBD diagnostic connector

Inside the access port on the right side of the dashboard, fixed on the dashboard crossbeam

Details:

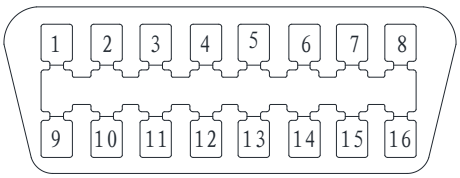

OBD standard connector

Vehicle Type	TEV
Location and detail of diagnostic connector	
Drawing No.	TEV-57-01

For Version 00, with basic configuration

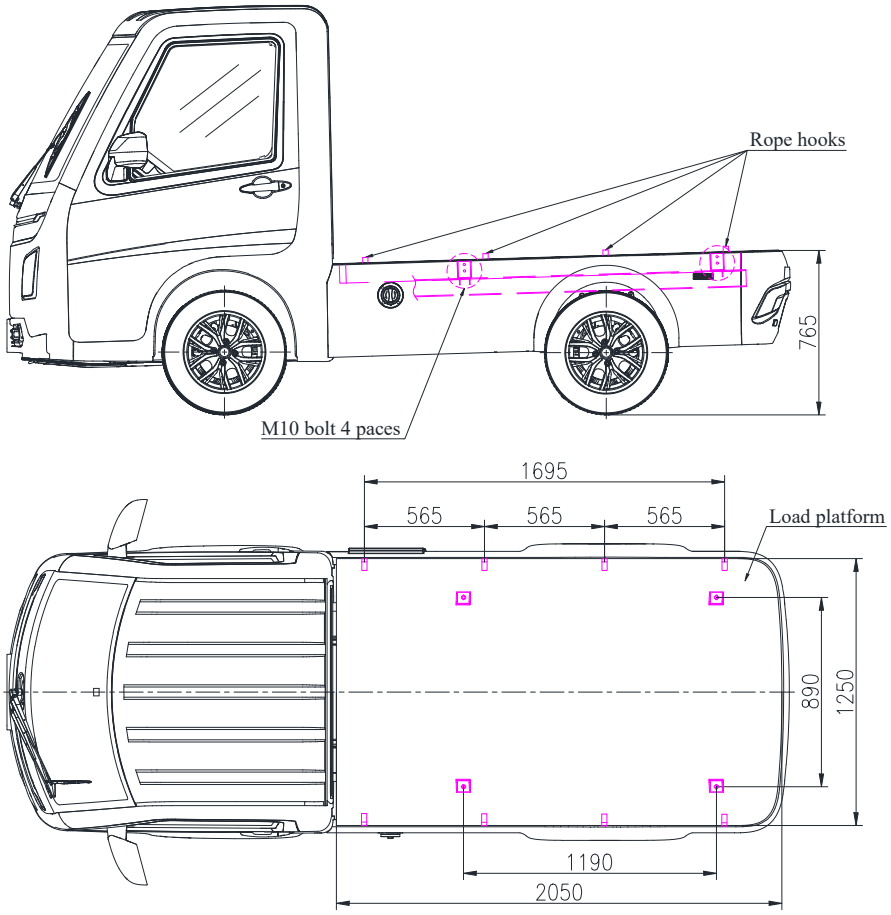

Remark: Rope hook, connect the protective net when loading the goods to protect the goods from falling off.

Vehicle Type	TEV
Load platform of basic configuration	
Drawing No.	TEV-58-01

For Version 01, with small load platform

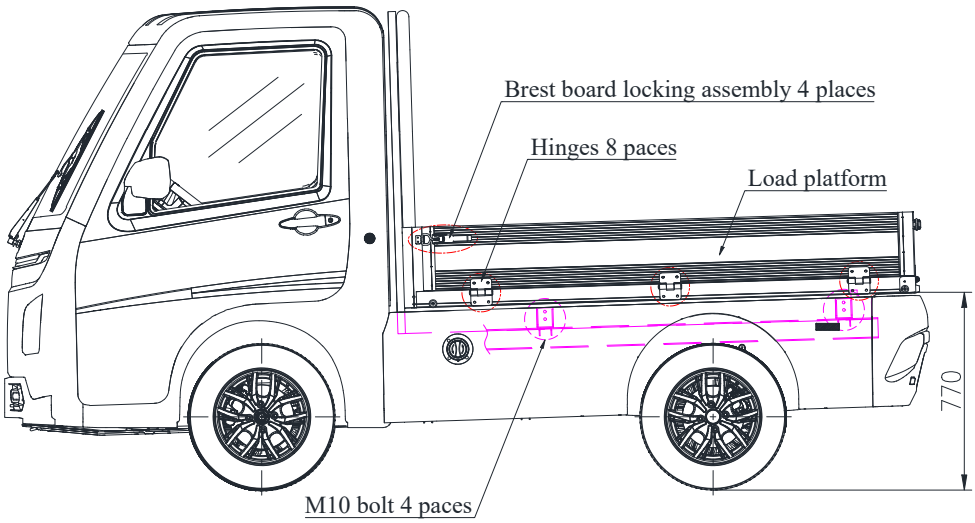

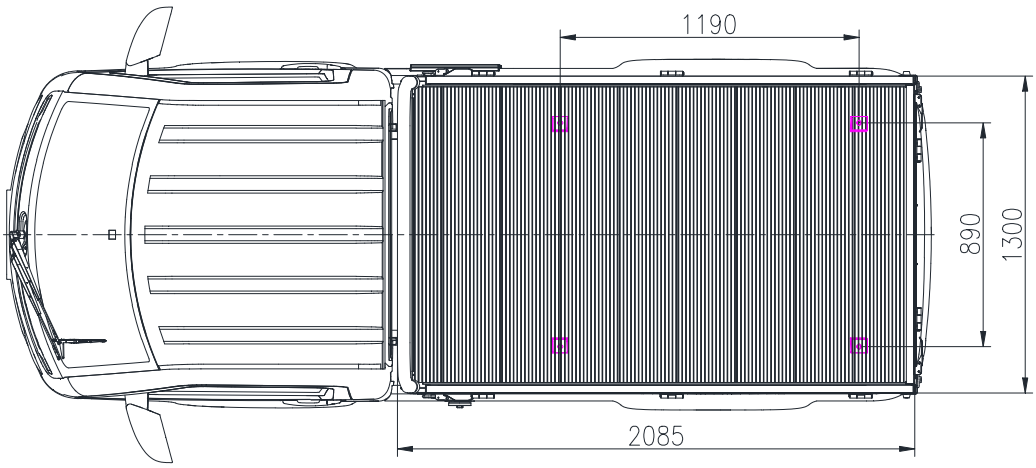

Brest board locking assembly 5:1

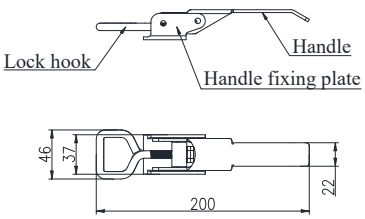

Hinges assembly 5:1

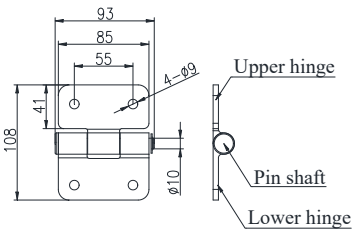

Vehicle Type	TEV
Small load platform	
Drawing No.	TEV-58-02-01

For Version 01, with small load platform

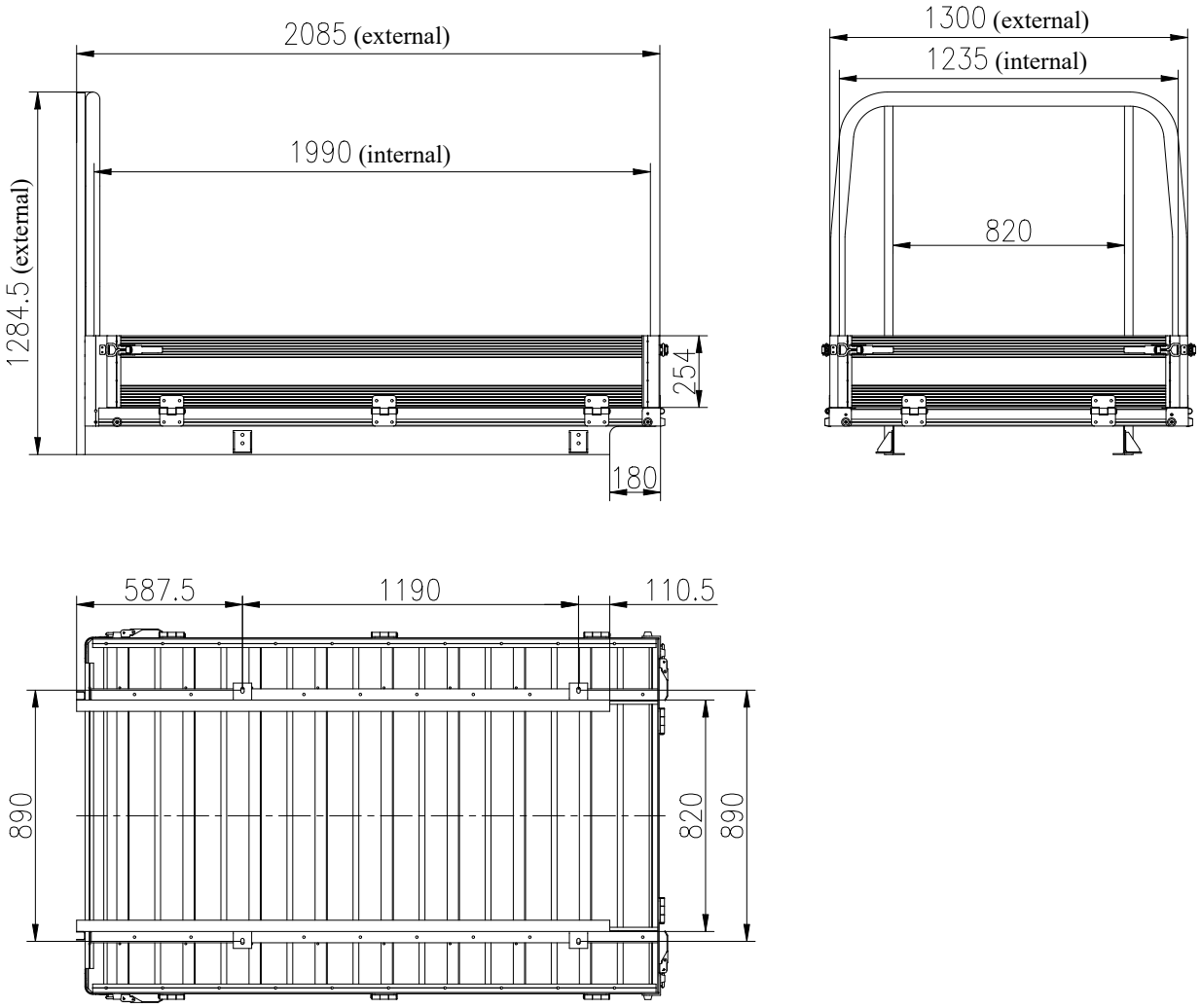

Vehicle Type	TEV
Details of small load platform	
Drawing No.	TEV-58-02-02

For Version 02, with big load platform

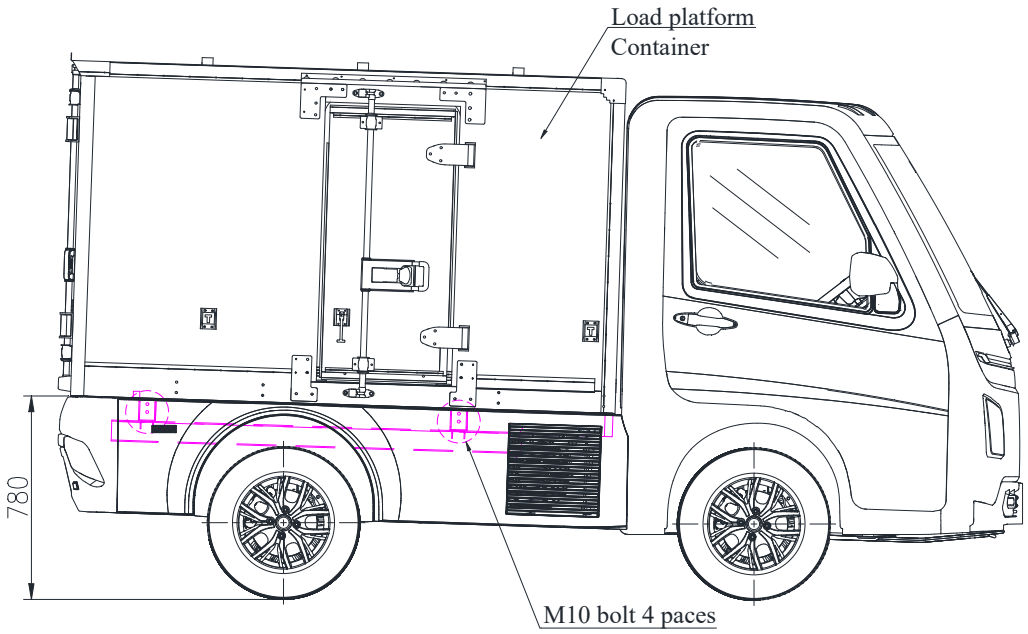

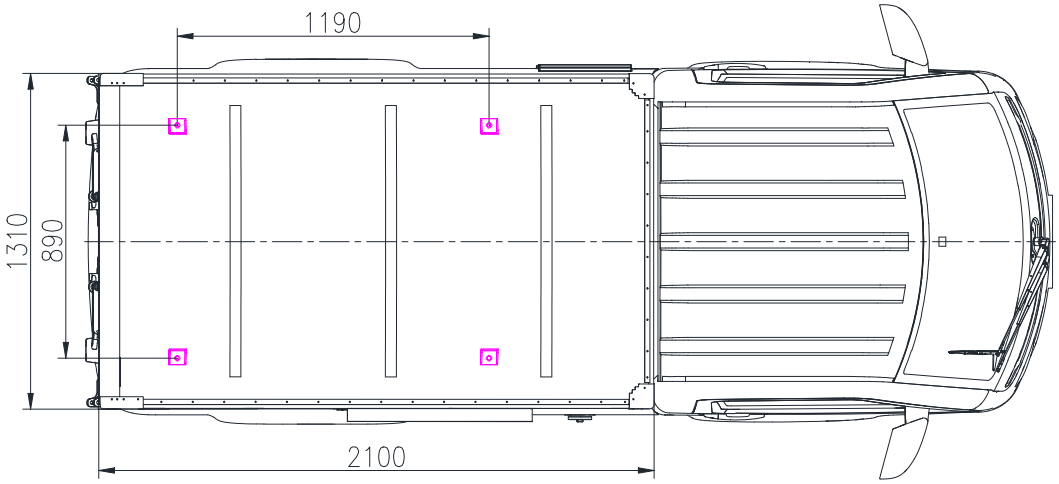

Vehicle Type	TEV
Big load platform	
Drawing No.	TEV-58-03-01

For Version 02, with big load platform

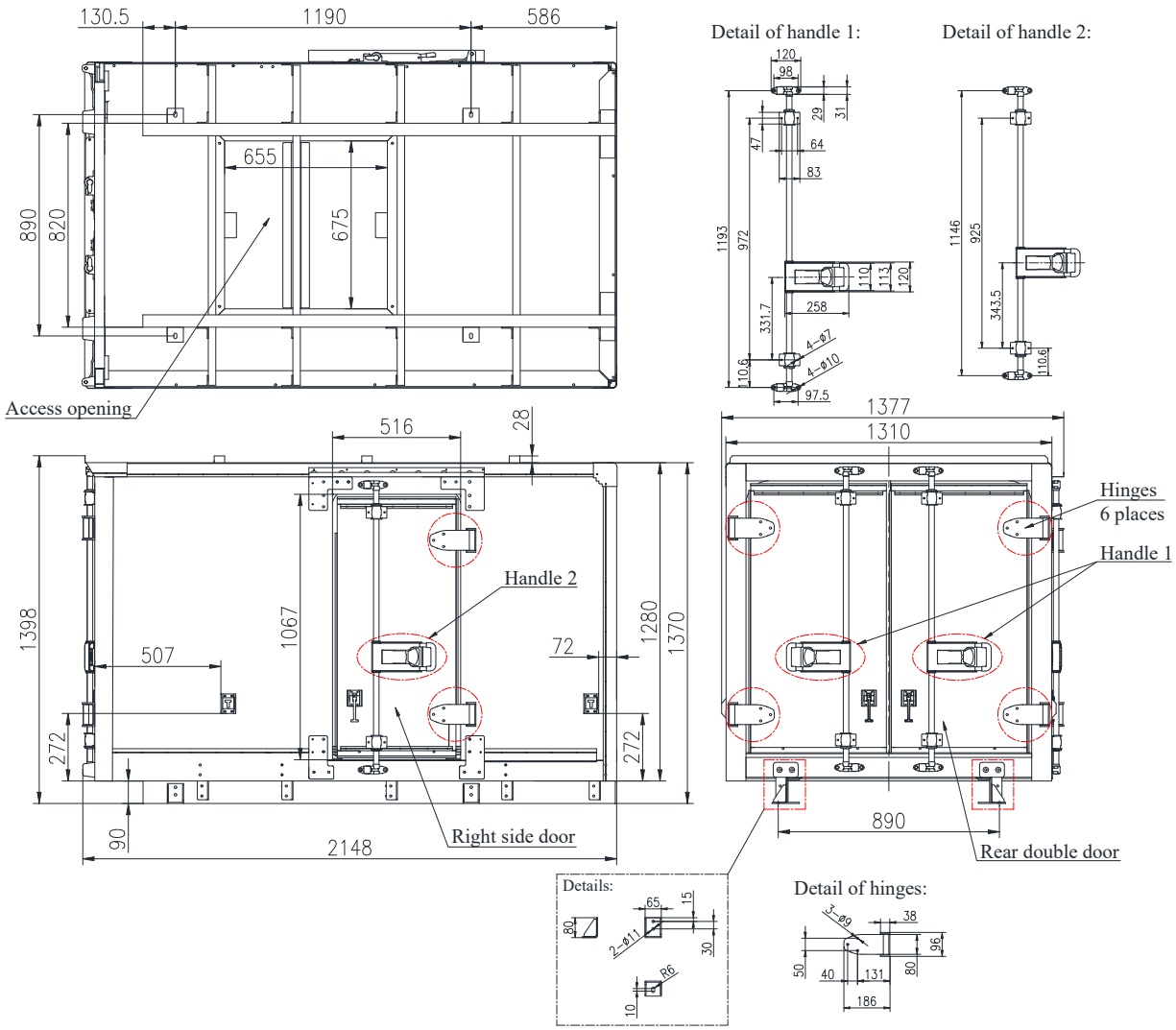

Vehicle Type	TEV
Details of big load platform	
Drawing No.	TEV-58-03-02

Option 1

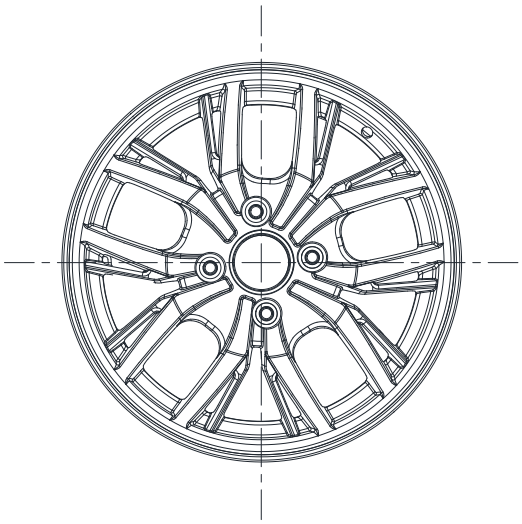

Option 2

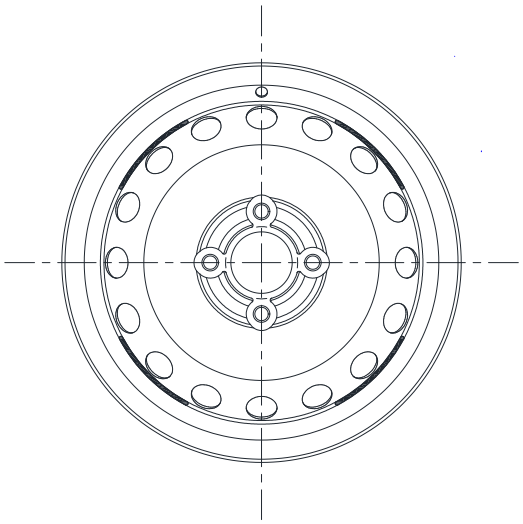

Vehicle Type	TEV
Shape of rim	
Drawing No.	TEV-59-01

HONG KONG RUNHORSE HOLDING CO., LIMITED

FLAT 01C3, 10/F CARNIVAL COMMERCIAL BUILDING 18 JAVA ROAD,
NORTH POINT, HONG KONG, CHINA

MANUFACTURER'S STATEMENT ON ENDURANCE TESTING

(Annex V to Commission Delegated Regulation (EU) number 3/2014)
(A duly completed version of this statement shall be included in the information folder)

The undersigned	:	< Mr. Cui Meng, Legal Person >
Company name and address of the manufacturer	:	HONG KONG RUNHORSE HOLDING CO., LIMITED FLAT 01C3, 10/F CARNIVAL COMMERCIAL BUILDING 18 JAVA ROAD, NORTH POINT, HONG KONG, CHINA
Name and address of the manufacturer's representative (if any)	:	Mobit Belgium Eindeken 3, 9940 Evergem, Belgium

Hereby states that the vehicles:

0.1.	Make (trade name of the manufacturer)	:	JINMA, RUNHORSE
0.2.	Type	:	TEV
0.2.1.	Variant	:	00, 01
0.2.2.	Version	:	00, 01, 02
0.2.3.	Commercial name(s) (if available)	:	TEV
0.3.	Category, subcategory and sub-subcategory of vehicle	:	L7e-CU

for which type-approval is sought shall withstand normal use as intended for at least 30,000 km travelled within five years of first registration, taking into account regular and scheduled maintenance and specific equipment adjustments, as described clearly and unambiguously in the instructions manual delivered with the vehicles.

The undersigned furthermore confirms that the endurance of the systems, parts and equipment critical for functional safety is ensured through appropriate testing and the use of good engineering practice.

This declaration has no bearing on any vehicle warranty.

Place	:	Hong Kong, China
Date	:	August 15, 2024
Signature	:	
Name and position in the company	:	Mr. Cui Meng, Legal Person

Hong Kong Runhorse Holding Co., Limited
香港大金馬摩托車有限公司

HONG KONG RUNHORSE HOLDING CO., LIMITED

FLAT 01C3, 10/F CARNIVAL COMMERCIAL BUILDING 18 JAVA ROAD,
NORTH POINT, HONG KONG, CHINA

MANUFACTURER'S STATEMENT ON STRUCTURE INTEGRITY

(Annex XIX to Commission Delegated Regulation (EU) number 3/2014)
(A duly completed version of this statement shall be included in the information folder)

The undersigned	:	< Mr. Cui Meng, Legal Person >
Company name and address of the manufacturer	:	HONG KONG RUNHORSE HOLDING CO., LIMITED FLAT 01C3, 10/F CARNIVAL COMMERCIAL BUILDING 18 JAVA ROAD, NORTH POINT, HONG KONG, CHINA
Name and address of the manufacturer's representative (if any)	:	Mobit Belgium Eindeken 3, 9940 Evergem, Belgium

Hereby states that the vehicles:

0.1.	Make (trade name of the manufacturer)	:	JINMA, RUNHORSE
0.2.	Type	:	TEV
0.2.1.	Variant	:	00, 01
0.2.2.	Version	:	00, 01, 02
0.2.3.	Commercial name(s) (if available)	:	TEV
0.3.	Category, subcategory and sub-subcategory of vehicle	:	L7e-CU

shall be constructed in a proper manner and are designed to be sufficiently robust to withstand the intended use over the vehicle's lifetime, taking into account regular and scheduled maintenance and specific equipment adjustments, as described clearly and unambiguously in the instructions manual delivered with the vehicles.
The undersigned furthermore agrees to and guarantees that specific analyses of vehicle structures, components and/or parts using engineering calculations, virtual testing methods and/or structural testing shall be made available in a timely manner to the approval authority and the European Commission upon request in case of a recall due to a serious safety risk.
This declaration applies to all vehicles covered by the type-approval to which this statement is annexed and has no bearing on any vehicle warranty.

Place	:	Hong Kong, China
Date	:	August 15, 2024
Signature	:	
Name and position in the company	:	Mr. Cui Meng, Legal Person

Hong Kong Runhorse Holding Co., Limited
香港大金馬摩托車有限公司

HONG KONG RUNHORSE HOLDING CO., LIMITED

FLAT 01C3, 10/F CARNIVAL COMMERCIAL BUILDING 18 JAVA ROAD,
NORTH POINT, HONG KONG, CHINA

MANUFACTURER'S CERTIFICATE ON ACCESS TO VEHICLE OBD (STAGE I) AND VEHICLE REPAIR AND MAINTENANCE INFORMATION

(A duly completed version of this statement shall be included in the information folder)

Reference number	:	168/2013-TEV-00
The undersigned	:	< Mr. Cui Meng, Legal Person >
Company name and address of the manufacturer	:	HONG KONG RUNHORSE HOLDING CO., LIMITED FLAT 01C3, 10/F CARNIVAL COMMERCIAL BUILDING 18 JAVA ROAD, NORTH POINT, HONG KONG, CHINA
Name and address of the manufacturer's representative (if any)	:	Mobit Belgium Eindeken 3, 9940 Evergem, Belgium

Hereby certifies that:

It provides access to vehicle OBD and vehicle repair and maintenance information in compliance with

- Chapter XV of regulation (EU) No 168/2013

With respect to the types of vehicle engine and pollution-control device listed in *Addendum1* to this certificate.

The following derogation is applied: carry-over systems [(1)].

The principal website addresses, through which the relevant information may be accessed and which are hereby certified to be in compliance with the above provisions, are listed in *Addendum 2* to this certificate along with the contact details of the manufacturer's representative listed in *Addendum 3* to this certificate, whose signature is below.

Where applicable: The manufacturer hereby also certifies that it has complied with the obligation in Article 57(8) of Regulation (EU) No 168/2013 to provide the relevant information for previous approvals of these vehicle types no later than six months after the date of type-approval.

Place	:	Hong Kong, China
Date	:	August 15, 2024
Signature	:	
Name and position in the company	:	Mr. Cui Meng, Legal Person

Addenda:

1: List of the types of vehicle, engine and pollution-control device

2: Web sites addresses

3: Contact details

Addendum 1

TO

MANUFACTURER'S CERTIFICATE WITH REFERENCE NUMBER 168/2013-TEV-00 ON ACCESS TO VEHICLE OBD (STAGE I) AND VEHICLE REPAIR AND MAINTENANCE INFORMATION

LIST OF THE TYPES OF VEHICLE:

0.2.	Type	:	TEV
0.2.1.	Variant	:	00, 01
0.2.2.	Version	:	00, 01, 02
0.2.3.	Commercial name(s) (if available)	:	TEV
0.3.	Category, subcategory and sub-subcategory of vehicle	:	L7e-CU
1.	Type-approval number including extension number (if available)	:	N.A.
1.1.	Type-approval issued on (date, if available)	:	N.A.

LIST OF THE TYPES OF ENGINES:

3. ~~Combustion engine /~~ electric motor~~/ hybrid application~~ [(1)] code :

TEV/00/00	TZ155XPS110B
TEV/00/01	
TEV/00/02	
TEV/01/00	TZ155MPS092
TEV/01/01	
TEV/01/02	

3.1.	Type-approval number (if available)	:	N.A.
3.2.	Type-approval issued on (date, if available)	:	N.A.

LIST OF THE TYPES OF POLLUTION-CONTROL DEVICES:

0.7.	Make(s) (trade name(s) of manufacturer)	:	N.A.
0.8.	Type	:	N.A.
0.8.1.	Commercial name(s) (if available)	:	N.A.
0.8.2.	Type-approval number including extension number (if available)	:	N.A.
0.8.3.	Type-approval issued on (date, if available)	:	N.A.

Addendum 2

TO

MANUFACTURER'S CERTIFICATE WITH REFERENCE NUMBER 168/2013-TEV-00 ON ACCESS TO VEHICLE OBD (STAGE I) AND VEHICLE REPAIR AND MAINTENANCE INFORMATION

Web site addresses referred to in this certificate:

https://www.runhorseev.com

.....

Addendum 3

TO

MANUFACTURER'S CERTIFICATE WITH REFERENCE NUMBER 168/2013-TEV-00 ON ACCESS TO VEHICLE OBD (STAGE I) AND VEHICLE REPAIR AND MAINTENANCE INFORMATION

Contact details of the manufacturer's representative referred to in this certificate:

Name: Mobit Belgium

Address: Eindeken 3, 9940 Evergem, Belgium

Name and position in the company: Alexander Harold A. De Bièvre / Manager

TEL: +32 9 278 72 56

Fax: +32 9 278 72 56

E-mail: info@mobit.eu

.....

HONG KONG RUNHORSE HOLDING CO., LIMITED

FLAT 01C3, 10/F CARNIVAL COMMERCIAL BUILDING 18 JAVA ROAD,
NORTH POINT, HONG KONG, CHINA

MANUFACTURER'S DECLARATION ON POWERTRAIN TAMPERING PREVENTION MEASURES (ANTI-TAMPERING)

1. Vehicle manufacturer's declaration on powertrain tampering prevention measures (anti-tampering):

- not to market interchangeable components which could enable propulsion unit performance to exceed levels applicable to the relevant (sub) category;

- manufacturer-facilitated modifications shall not increase the propulsion unit performance of the vehicle;

- modifications and interchangeability of parts and components

MANUFACTURER'S DECLARATION NOT TO MARKET INTERCHANGEABLE COMPONENTS WHICH COULD ENABLE PROPULSION UNIT PERFORMANCE TO EXCEED LEVELS APPLICABLE TO THE RELEVANT (SUB) CATEGORY

(A duly-completed version of this statement shall be included in the information folder)

Company name and address of the manufacturer	:	HONG KONG RUNHORSE HOLDING CO., LIMITED FLAT 01C3, 10/F CARNIVAL COMMERCIAL BUILDING 18 JAVA ROAD, NORTH POINT, HONG KONG, CHINA
Name and address of the manufacturer's representative (if any)	:	Mobit Belgium Eindeken 3, 9940 Evergem, Belgium

Hereby states that the vehicles:

0.1.	Make (trade name of the manufacturer)	:	JINMA, RUNHORSE
0.2.	Type	:	TEV
0.2.1.	Variant	:	00, 01
0.2.2.	Version	:	00, 01, 02
0.2.3.	Commercial name(s) (if available)	:	TEV
0.3.	Category, subcategory and sub-subcategory of vehicle	:	L7e-CU

HONG KONG RUNHORSE HOLDING CO., LIMITED

FLAT 01C3, 10/F CARNIVAL COMMERCIAL BUILDING 18 JAVA ROAD,
NORTH POINT, HONG KONG, CHINA

WILL NOT MARKET INTERCHANGEABLE COMPONENTS WHICH COULD ENABLE PROPULSION UNIT PERFORMANCE TO EXCEED LEVELS APPLICABLE TO THE RELEVANT (SUB) CATEGORY

and that

The manufacturer-facilitated modifications of the following characteristics:

(a) ~~spark delivery of the ignition system if applicable~~

(b) ~~fuel feed and delivery system~~

(c) ~~air intake system including air filter(s) (modification or removal)~~

(d) propulsion battery configuration or electric power to the electric motor(s) if applicable

(e) drive-train

(f) and the control unit(s) that control(s) the propulsion unit performance of the powertrain

shall comply with the requirements set out in point 2.6. of Annex II to Commission Delegated Regulation (EU) No 44/2014*2018/295

ADDITIONAL STATEMENT REGARDING POINT 2.8.3. OF ANNEX II TO COMMISSION DELEGATED REGULATION (EU) No 44/2014*2018/295

Any reprogrammable computer codes or operating parameter afford a level of protection at least as high as the provisions in ISO 15031-7:2001, provided that the security exchange is conducted using the communication protocols and standardized diagnostic connector prescribed in Appendix 1 to Annex XII.

Place : Hong Kong, China

Date : August 15, 2024

Signature :

Name and position in the company : Mr. Cui Meng, Legal Person

HONG KONG RUNHORSE HOLDING CO., LIMITED

FLAT 01C3, 10/F CARNIVAL COMMERCIAL BUILDING 18 JAVA ROAD,
NORTH POINT, HONG KONG, CHINA

STATEMENT ON NONE "DEFEAT DEVICE"

The undersigned	:	< Mr. Cui Meng, Legal Person >
Company name and address of the manufacturer	:	HONG KONG RUNHORSE HOLDING CO., LIMITED FLAT 01C3, 10/F CARNIVAL COMMERCIAL BUILDING 18 JAVA ROAD, NORTH POINT, HONG KONG, CHINA
Name and address of the manufacturer's representative (if any)	:	Mobit Belgium Eindeken 3, 9940 Evergem, Belgium

Hereby states that the vehicles:

0.1.	Make (trade name of the manufacturer)	:	JINMA, RUNHORSE
0.2.	Type (1)	:	TEV
0.2.1.	Variant(s) (1)	:	00, 01
0.2.2.	Version(s) (1)	:	00, 01, 02
0.2.3.	Commercial name(s) (if available)	:	TEV
0.3.	Category, subcategory and sub-subcategory of vehicle(2)	:	L7e-CU

are not using any software or device that can be considered as "defeat device" which may impact the emission performance of the vehicles.

Place	:	Hong Kong, China
Date	:	August 15, 2024
Signature	:	
Name and position in the company	:	Mr. Cui Meng, Legal Person

Hong Kong Runhorse Holding Co., Limited
香港大金馬摩托車有限公司

HONG KONG RUNHORSE HOLDING CO., LIMITED

FLAT 01C3, 10/F CARNIVAL COMMERCIAL BUILDING 18 JAVA ROAD,
NORTH POINT, HONG KONG, CHINA

STATEMENT ON ANTI-THEFT DEVICE

To whom it may concern,

For the vehicle type: TEV

Acc. to ECE R18 point 5.7

The lock is pin tumbler system; The vehicle's key locking system incorporates more than 1000 different combinations.

Signature :

Name and position in the company : Mr. Cui Meng, Legal Person

HONG KONG RUNHORSE HOLDING CO., LIMITED

HONG KONG RUNHORSE HOLDING CO., LIMITED

FLAT 01C3, 10/F CARNIVAL COMMERCIAL BUILDING 18 JAVA ROAD,
NORTH POINT, HONG KONG, CHINA

STATEMENT ON NONE ASBESTOS MATERIAL

Vehicle make : JINMA, RUNHORSE

Vehicle type : TEV

We, **HONG KONG RUNHORSE HOLDING CO., LIMITED**, here with declare for the above mentioned vehicle the following items:

-Brake pads

Do not contain any asbestos.

Signature :

Name and position in the company : Mr. Cui Meng, Legal Person

HONG KONG RUNHORSE HOLDING CO., LIMITED

HONG KONG RUNHORSE HOLDING CO., LIMITED

FLAT 01C3, 10/F CARNIVAL COMMERCIAL BUILDING 18 JAVA ROAD,
NORTH POINT, HONG KONG, CHINA

Statement Concerning Authority of Signature on COC Paper

We, **HONG KONG RUNHORSE HOLDING CO., LIMITED**, declare that the undersigned, **Mr. Cui Meng**, the **Legal Person** of our company, will be the authorized person to sign the COC paper of the quadricycles.

Type: TEV

Specification of signature of COC:

Signature:

HONG KONG RUNHORSE HOLDING CO., LIMITED

Date: August 15, 2024

COMPLETE VEHICLE
EU CERTIFICATE OF CONFORMITY

The undersigned, Mr. Cui Meng, Legal Person
Hereby certifies that the following complete vehicle:

0.1. Make (trade name of the manufacturer): JINMA

0.2. Type: TEV

0.2.1. Variant: 00

0.2.2. Version: 00

0.2.3. Commercial name (if available): TEV

0.3. Category, subcategory and sub-subcategory of vehicle: L7e-CU

0.4. Company name and address of manufacturer:
HONG KONG RUNHORSE HOLDING CO., LIMITED
FLAT 01C3, 10/F CARNIVAL COMMERCIAL BUILDING 18 JAVA ROAD,
NORTH POINT, HONG KONG, CHINA

0.4.2. Name and address of manufacturer's authorized representative (if any):
Mobit Belgium
Eindeken 3, 9940 Evergem, Belgium

0.5.1. Location of the manufacturer's statutory plate(s): C, x -134, y 0, z 680

0.5.2. Method of attachment of the manufacturer's statutory plate(s): By riveted

0.6. Location of the vehicle identification number: R, x 235, y 325, z 555

1. Vehicle identification number: ☆R3W8AZKY??A??????☆

conforms in all respects to the type described in EU type-approval e9*168/2013*16391*00 (type-approval number including extension number) (CV* type-approval number including extension number) issued on XX.XX.XXXX (date of issue) (CV* date of issue) and can be permanently registered in Member States having right/left-hand traffic and using metric/imperial units for the speedometer.

Hong Kong, China

(place)

XX.XX.XXXX

(date)

(signature)

General construction characteristics

1.3. Number of axles: 2 and wheels: 4
1.3.1. Axles with twinned wheels: N.A.
1.3.2. Powered axles: R
6.2.4. Advanced braking system: ~~ABS / CBS /~~ Both ABS and CBS ~~/ None~~

Main dimensions

2.2.1.	Length:	3690 mm
2.2.2.	Width:	1400 mm
2.2.3.	Height:	1910 mm
2.2.4.	Wheelbase:	1815 mm
2.2.4.1.	Wheelbase sidecar:	N.A.
2.2.5.	Track width	
2.2.5.1.	Track width front:	1125 mm
2.2.5.2.	Track width rear:	1170 mm
2.2.5.3.	Track width sidecar:	N.A.
2.2.10.6	Ground clearance between the axles:	N.A.
2.2.15.	Wheelbase to ground clearance ratio:	N.A.
2.2.17	Seat height:	N.A.

Masses

2.1.1.	Mass in running order:	595 kg
2.1.2.	Actual mass:	880 kg
2.1.3.	Technically permissible maximum laden mass:	1604 kg
2.1.3.1.	Technically permissible maximum mass on front axle:	730 kg
2.1.3.2.	Technically permissible maximum mass on rear axle:	874 kg
2.1.3.3.	Technically permissible maximum mass on sidecar axle:	N.A.
2.1.7.	Technically permissible maximum towable mass:	
	Braked: N.A. Unbraked:	N.A.
2.1.7.1.	Technically permissible maximum laden mass of the combination:	N.A.
2.1.7.2.	Technically permissible maximum mass at the coupling point:	N.A.

Powertrain

3.1.1.1. Manufacturer: N.A.
3.1.1.2. Engine code (as marked on the engine or other means of identification): N.A.
3.2.1.2. Working principle of the combustion engine: ~~internal combustion engine (ICE)/positive ignition/compression ignition/external combustion engine (ECE)/turbine/compressed air~~
3.2.1.4.1. Number of cylinders: N.A.
3.2.1.4.2. Arrangement of cylinders: ~~LI / V / O / S~~
3.2.1.5. Engine capacity: N.A.
1.9. Maximum net power: N.A.
1.10. Ratio maximum net power/mass of the vehicle in running order: N.A.
3.2.3.1. Fuel type: N.A.
3.2.3.2. Vehicle fuel combination: ~~mono-fuel/bi-fuel/flex-fuel~~
3.2.3.2.1. Maximum amount of bio-fuel acceptable in fuel: N.A.

3.1.2.1. Manufacturer: Xuzhou Rock Drive Electric Technology Co., Ltd
3.1.2.2. Electric motor code (as marked on the engine or other means of identification): TZ155XPS110B ?????????????
3.3.3.4. ~~15~~/30 minutes power: 14.8 kW
3.1.3.1. Manufacturer: N.A.
3.1.3.2. Application code (as marked on the engine or other means of identification): N.A.
3.3.1. Electric vehicle configuration: pure electric/~~hybrid electric/manpower electric~~
3.3.5.2. Category of hybrid electric vehicle: ~~off-vehicle charging/not off-vehicle charging~~
3.9.2. Maximum assistance factor: N.A.

Maximum speed

1.8. Maximum speed of vehicle: 80 km/h
3.9.3. Maximum vehicle speed for which the electric motor gives assistance: N.A.

Drive-train and control

3.5.3.9. Transmission (type): O
3.5.4. Gear ratios: 10.400
3.5.4.1. Final drive ratio: N.A.
3.5.4.2. Overall gear ratio in highest gear: N.A.

Installation of tyres

6.18.1.1. Tyre size designation:
Axle 1: 175/65R14, 82H Axle 2: 175/65R14, 82H
Minimum load capacity index:
Axle 1: 73 Axle 2: 79
Minimum speed category symbol:
Axle 1: F Axle 2: F
Recommended pressure:
Axle 1: 300kPa Axle 2: 300kPa
Rim size:
Axle 1: 5.5*14 Axle 2: 5.5*14
Sidecar wheel: N.A.

Bodywork

6.20.2.1. Door configuration and number of doors: 1L, 1R
6.16.1. Number of seating positions: 2
6.16.1.1. Location and arrangement: r1:1L, 1R

Coupling devices

7.2.8. Type-approval number of coupling-device: N.A.

Environmental performance

4.0.1. Environmental step: Euro 5+ (~~3/4/5/~~ 5+)
4.0.6. Sound level measured according to: N.A.
4.0.6.1. Stationary: N.A.
4.0.6.2. Drive-by : N.A.
4.0.6.3. Limit value for L_{urban}: N.A.

3.2.15. Exhaust emissions measured according to: N.A.
3.2.15.1. Type I test: tailpipe emissions after cold start, including the deterioration factor, if applicable:

CO: N.A.
THC: N.A.
NMHC: N.A.
NOx: N.A.
THC+NOx: N.A.
PM: N.A.

3.2.15.2 Type II test: tailpipe emissions at (increased) idle and free acceleration:
HC: N.A. ppm at normal idling speed and: N.A. ppm at high idle speed
CO: N.A. %vol at normal idling speed and: N.A. %vol at high idle speed

3.2.15.3. Smoke corrected absorption coefficient: N.A.

Energy efficiency

4.0.2. Fuel consumption: N.A.
4.0.3. CO_2 emissions: N.A.
4.0.4. Energy consumption: 88 Wh/km
4.0.5. Electric range: 191 km

Conversion of the performance of the vehicle:

8.1. Vehicle appropriate for converting its performance level between subcategories (L3e/L4e)-A2 and (L3e/L4e)-A3 and vice versa: ~~yes~~/no

Additional information:

9.1. Remarks: N.A.
9.2. Exemptions: N.A.

COMPLETE VEHICLE
EU CERTIFICATE OF CONFORMITY

The undersigned, Mr. Cui Meng, Legal Person
Hereby certifies that the following complete vehicle:

0.1. Make (trade name of the manufacturer): JINMA

0.2. Type: TEV

0.2.1. Variant: 00

0.2.2. Version: 01

0.2.3. Commercial name (if available): TEV

0.3. Category, subcategory and sub-subcategory of vehicle: L7e-CU

0.4. Company name and address of manufacturer:
HONG KONG RUNHORSE HOLDING CO., LIMITED
FLAT 01C3, 10/F CARNIVAL COMMERCIAL BUILDING 18 JAVA ROAD,
NORTH POINT, HONG KONG, CHINA

0.4.2. Name and address of manufacturer's authorized representative (if any):
Mobit Belgium
Eindeken 3, 9940 Evergem, Belgium

0.5.1. Location of the manufacturer's statutory plate(s): C, x -134, y 0, z 680

0.5.2. Method of attachment of the manufacturer's statutory plate(s): By riveted

0.6. Location of the vehicle identification number: R, x 235, y 325, z 555

1. Vehicle identification number: ☆R3W8AZKY??A??????☆

conforms in all respects to the type described in EU type-approval e9*168/2013*16391*00 (type-approval number including extension number) (CV* type-approval number including extension number) issued on XX.XX.XXXX (date of issue) (CV* date of issue) and can be permanently registered in Member States having right/left-hand traffic and using metric/imperial units for the speedometer.

Hong Kong, China

(place)

XX.XX.XXXX

(date)

(signature)

General construction characteristics

1.3. Number of axles: 2 and wheels: 4
1.3.1. Axles with twinned wheels: N.A.
1.3.2. Powered axles: R
6.2.4. Advanced braking system: ~~ABS / CBS /~~ Both ABS and CBS ~~/ None~~

Main dimensions

2.2.1.	Length:	3690 mm
2.2.2.	Width:	1400 mm
2.2.3.	Height:	1910 mm
2.2.4.	Wheelbase:	1815 mm
2.2.4.1.	Wheelbase sidecar:	N.A.
2.2.5.	Track width	
2.2.5.1.	Track width front:	1125 mm
2.2.5.2.	Track width rear:	1170 mm
2.2.5.3.	Track width sidecar:	N.A.
2.2.10.6	Ground clearance between the axles:	N.A.
2.2.15.	Wheelbase to ground clearance ratio:	N.A.
2.2.17	Seat height:	N.A.

Masses

2.1.1.	Mass in running order:	595 kg
2.1.2.	Actual mass:	939 kg
2.1.3.	Technically permissible maximum laden mass:	1604 kg
2.1.3.1.	Technically permissible maximum mass on front axle:	743 kg
2.1.3.2.	Technically permissible maximum mass on rear axle:	861 kg
2.1.3.3.	Technically permissible maximum mass on sidecar axle:	N.A.
2.1.7.	Technically permissible maximum towable mass:	
	Braked: N.A. Unbraked:	N.A.
2.1.7.1.	Technically permissible maximum laden mass of the combination:	N.A.
2.1.7.2.	Technically permissible maximum mass at the coupling point:	N.A.

Powertrain

3.1.1.1. Manufacturer: N.A.
3.1.1.2. Engine code (as marked on the engine or other means of identification): N.A.
3.2.1.2. Working principle of the combustion engine: ~~internal combustion engine (ICE)/positive ignition/compression ignition/external combustion engine (ECE)/turbine/compressed air~~
3.2.1.4.1. Number of cylinders: N.A.
3.2.1.4.2. Arrangement of cylinders: ~~LI / V / O / S~~
3.2.1.5. Engine capacity: N.A.
1.9. Maximum net power: N.A.
1.10. Ratio maximum net power/mass of the vehicle in running order: N.A.
3.2.3.1. Fuel type: N.A.
3.2.3.2. Vehicle fuel combination: ~~mono-fuel/bi-fuel/flex-fuel~~
3.2.3.2.1. Maximum amount of bio-fuel acceptable in fuel: N.A.

3.1.2.1. Manufacturer: Xuzhou Rock Drive Electric Technology Co., Ltd
3.1.2.2. Electric motor code (as marked on the engine or other means of identification): TZ155XPS110B ?????????????
3.3.3.4. ~~15~~/30 minutes power: 14.8 kW
3.1.3.1. Manufacturer: N.A.
3.1.3.2. Application code (as marked on the engine or other means of identification): N.A.
3.3.1. Electric vehicle configuration: pure electric~~/hybrid electric/manpower electric~~
3.3.5.2. Category of hybrid electric vehicle: ~~off-vehicle charging/not off-vehicle charging~~
3.9.2. Maximum assistance factor: N.A.

Maximum speed

1.8. Maximum speed of vehicle: 80 km/h
3.9.3. Maximum vehicle speed for which the electric motor gives assistance: N.A.

Drive-train and control

3.5.3.9. Transmission (type): O
3.5.4. Gear ratios: 10.400
3.5.4.1. Final drive ratio: N.A.
3.5.4.2. Overall gear ratio in highest gear: N.A.

Installation of tyres

6.18.1.1. Tyre size designation:
Axle 1: 175/65R14, 82H Axle 2: 175/65R14, 82H
Minimum load capacity index:
Axle 1: 74 Axle 2: 79
Minimum speed category symbol:
Axle 1: F Axle 2: F
Recommended pressure:
Axle 1: 300kPa Axle 2: 300kPa
Rim size:
Axle 1: 5.5*14 Axle 2: 5.5*14
Sidecar wheel: N.A.

Bodywork

6.20.2.1. Door configuration and number of doors: 1L, 1R
6.16.1. Number of seating positions: 2
6.16.1.1. Location and arrangement: r1:1L, 1R

Coupling devices

7.2.8. Type-approval number of coupling-device: N.A.

Environmental performance

4.0.1. Environmental step: Euro 5+ (~~3/4/5/~~ 5+)
4.0.6. Sound level measured according to: N.A.
4.0.6.1. Stationary: N.A.
4.0.6.2. Drive-by : N.A.
4.0.6.3. Limit value for L_{urban}: N.A.

3.2.15. Exhaust emissions measured according to: N.A.
3.2.15.1. Type I test: tailpipe emissions after cold start, including the deterioration factor, if applicable:

CO: N.A.
THC: N.A.
NMHC: N.A.
NOx: N.A.
THC+NOx: N.A.
PM: N.A.

3.2.15.2 Type II test: tailpipe emissions at (increased) idle and free acceleration:
HC: N.A. ppm at normal idling speed and: N.A. ppm at high idle speed
CO: N.A. %vol at normal idling speed and: N.A. %vol at high idle speed

3.2.15.3. Smoke corrected absorption coefficient: N.A.

Energy efficiency

4.0.2. Fuel consumption: N.A.
4.0.3. CO_2 emissions: N.A.
4.0.4. Energy consumption: 88 Wh/km
4.0.5. Electric range: 191 km

Conversion of the performance of the vehicle:

8.1. Vehicle appropriate for converting its performance level between subcategories (L3e/L4e)-A2 and (L3e/L4e)-A3 and vice versa: ~~yes~~/no

Additional information:

9.1. Remarks: N.A.
9.2. Exemptions: N.A.

COMPLETE VEHICLE
EU CERTIFICATE OF CONFORMITY

The undersigned, Mr. Cui Meng, Legal Person
Hereby certifies that the following complete vehicle:

0.1. Make (trade name of the manufacturer): JINMA

0.2. Type: TEV

0.2.1. Variant: 00

0.2.2. Version: 02

0.2.3. Commercial name (if available): TEV

0.3. Category, subcategory and sub-subcategory of vehicle: L7e-CU

0.4. Company name and address of manufacturer:
HONG KONG RUNHORSE HOLDING CO., LIMITED
FLAT 01C3, 10/F CARNIVAL COMMERCIAL BUILDING 18 JAVA ROAD,
NORTH POINT, HONG KONG, CHINA

0.4.2. Name and address of manufacturer's authorized representative (if any):
Mobit Belgium
Eindeken 3, 9940 Evergem, Belgium

0.5.1. Location of the manufacturer's statutory plate(s): C, x -134, y 0, z 680

0.5.2. Method of attachment of the manufacturer's statutory plate(s): By riveted

0.6. Location of the vehicle identification number: R, x 235, y 325, z 555

1. Vehicle identification number: ☆R3W8AZKY??A??????☆

conforms in all respects to the type described in EU type-approval e9*168/2013*16391*00 (type-approval number including extension number) (CV* type-approval number including extension number) issued on XX.XX.XXXX (date of issue) (CV* date of issue) and can be permanently registered in Member States having right/left-hand traffic and using metric/imperial units for the speedometer.

Hong Kong, China

(place)

XX.XX.XXXX

(date)

(signature)

General construction characteristics

1.3. Number of axles: 2 and wheels: 4
1.3.1. Axles with twinned wheels: N.A.
1.3.2. Powered axles: R
6.2.4. Advanced braking system: ~~ABS / CBS /~~ Both ABS and CBS ~~/ None~~

Main dimensions

2.2.1.	Length:	3690 mm
2.2.2.	Width:	1400 mm
2.2.3.	Height:	2080 mm
2.2.4.	Wheelbase:	1815 mm
2.2.4.1.	Wheelbase sidecar:	N.A.
2.2.5.	Track width	
2.2.5.1.	Track width front:	1125 mm
2.2.5.2.	Track width rear:	1170 mm
2.2.5.3.	Track width sidecar:	N.A.
2.2.10.6	Ground clearance between the axles:	N.A.
2.2.15.	Wheelbase to ground clearance ratio:	N.A.
2.2.17	Seat height:	N.A.

Masses

2.1.1.	Mass in running order:	595 kg
2.1.2.	Actual mass:	939 kg
2.1.3.	Technically permissible maximum laden mass:	1604 kg
2.1.3.1.	Technically permissible maximum mass on front axle:	753 kg
2.1.3.2.	Technically permissible maximum mass on rear axle:	851 kg
2.1.3.3.	Technically permissible maximum mass on sidecar axle:	N.A.
2.1.7.	Technically permissible maximum towable mass:	
	Braked: N.A. Unbraked:	N.A.
2.1.7.1.	Technically permissible maximum laden mass of the combination:	N.A.
2.1.7.2.	Technically permissible maximum mass at the coupling point:	N.A.

Powertrain

3.1.1.1. Manufacturer: N.A.
3.1.1.2. Engine code (as marked on the engine or other means of identification): N.A.
3.2.1.2. Working principle of the combustion engine: ~~internal combustion engine (ICE)/positive ignition/compression ignition/external combustion engine (ECE)/turbine/compressed air~~
3.2.1.4.1. Number of cylinders: N.A.
3.2.1.4.2. Arrangement of cylinders: ~~LI / V / O / S~~
3.2.1.5. Engine capacity: N.A.
1.9. Maximum net power: N.A.
1.10. Ratio maximum net power/mass of the vehicle in running order: N.A.
3.2.3.1. Fuel type: N.A.
3.2.3.2. Vehicle fuel combination: ~~mono-fuel/bi-fuel/flex-fuel~~
3.2.3.2.1. Maximum amount of bio-fuel acceptable in fuel: N.A.

3.1.2.1. Manufacturer: Xuzhou Rock Drive Electric Technology Co., Ltd
3.1.2.2. Electric motor code (as marked on the engine or other means of identification): TZ155XPS110B ?????????????
3.3.3.4. ~~15~~/30 minutes power: 14.8 kW
3.1.3.1. Manufacturer: N.A.
3.1.3.2. Application code (as marked on the engine or other means of identification): N.A.
3.3.1. Electric vehicle configuration: pure electric~~/hybrid electric/manpower electric~~
3.3.5.2. Category of hybrid electric vehicle: ~~off-vehicle charging/not off-vehicle charging~~
3.9.2. Maximum assistance factor: N.A.

Maximum speed

1.8. Maximum speed of vehicle: 80 km/h
3.9.3. Maximum vehicle speed for which the electric motor gives assistance: N.A.

Drive-train and control

3.5.3.9. Transmission (type): O
3.5.4. Gear ratios: 10.400
3.5.4.1. Final drive ratio: N.A.
3.5.4.2. Overall gear ratio in highest gear: N.A.

Installation of tyres

6.18.1.1. Tyre size designation:
Axle 1: 175/65R14, 82H Axle 2: 175/65R14, 82H
Minimum load capacity index:
Axle 1: 75 Axle 2: 79
Minimum speed category symbol:
Axle 1: F Axle 2: F
Recommended pressure:
Axle 1: 300kPa Axle 2: 300kPa
Rim size:
Axle 1: 5.5*14 Axle 2: 5.5*14
Sidecar wheel: N.A.

Bodywork

6.20.2.1. Door configuration and number of doors: 1L, 1R
6.16.1. Number of seating positions: 2
6.16.1.1. Location and arrangement: r1:1L, 1R

Coupling devices

7.2.8. Type-approval number of coupling-device: N.A.

Environmental performance

4.0.1. Environmental step: Euro 5+ (~~3/4/5/~~ 5+)
4.0.6. Sound level measured according to: N.A.
4.0.6.1. Stationary: N.A.
4.0.6.2. Drive-by : N.A.
4.0.6.3. Limit value for L_{urban}: N.A.

3.2.15. Exhaust emissions measured according to: N.A.
3.2.15.1. Type I test: tailpipe emissions after cold start, including the deterioration factor, if applicable:

CO: N.A.
THC: N.A.
NMHC: N.A.
NOx: N.A.
THC+NOx: N.A.
PM: N.A.

3.2.15.2 Type II test: tailpipe emissions at (increased) idle and free acceleration:
HC: N.A. ppm at normal idling speed and: N.A. ppm at high idle speed
CO: N.A. %vol at normal idling speed and: N.A. %vol at high idle speed

3.2.15.3. Smoke corrected absorption coefficient: N.A.

Energy efficiency

4.0.2. Fuel consumption: N.A.
4.0.3. CO_2 emissions: N.A.
4.0.4. Energy consumption: 88 Wh/km
4.0.5. Electric range: 191 km

Conversion of the performance of the vehicle:

8.1. Vehicle appropriate for converting its performance level between subcategories (L3e/L4e)-A2 and (L3e/L4e)-A3 and vice versa: ~~yes~~/no

Additional information:

9.1. Remarks: N.A.
9.2. Exemptions: N.A.

COMPLETE VEHICLE
EU CERTIFICATE OF CONFORMITY

The undersigned, Mr. Cui Meng, Legal Person
Hereby certifies that the following complete vehicle:

0.1. Make (trade name of the manufacturer): JINMA

0.2. Type: TEV

0.2.1. Variant: 01

0.2.2. Version: 00

0.2.3. Commercial name (if available): TEV

0.3. Category, subcategory and sub-subcategory of vehicle: L7e-CU

0.4. Company name and address of manufacturer:
HONG KONG RUNHORSE HOLDING CO., LIMITED
FLAT 01C3, 10/F CARNIVAL COMMERCIAL BUILDING 18 JAVA ROAD,
NORTH POINT, HONG KONG, CHINA

0.4.2. Name and address of manufacturer's authorized representative (if any):
Mobit Belgium
Eindeken 3, 9940 Evergem, Belgium

0.5.1. Location of the manufacturer's statutory plate(s): C, x -134, y 0, z 680

0.5.2. Method of attachment of the manufacturer's statutory plate(s): By riveted

0.6. Location of the vehicle identification number: R, x 235, y 325, z 555

1. Vehicle identification number: ☆R3W8AZKX??A??????☆

conforms in all respects to the type described in EU type-approval e9*168/2013*16391*00 (type-approval number including extension number) (CV* type-approval number including extension number) issued on XX.XX.XXXX (date of issue) (CV* date of issue) and can be permanently registered in Member States having right/left-hand traffic and using metric/imperial units for the speedometer.

Hong Kong, China

(place)

XX.XX.XXXX

(date)

(signature)

General construction characteristics

1.3. Number of axles: 2 and wheels: 4
1.3.1. Axles with twinned wheels: N.A.
1.3.2. Powered axles: R
6.2.4. Advanced braking system: ~~ABS / CBS /~~ Both ABS and CBS ~~/ None~~

Main dimensions

2.2.1.	Length:	3690 mm
2.2.2.	Width:	1400 mm
2.2.3.	Height:	1910 mm
2.2.4.	Wheelbase:	1815 mm
2.2.4.1.	Wheelbase sidecar:	N.A.
2.2.5.	Track width	
2.2.5.1.	Track width front:	1125 mm
2.2.5.2.	Track width rear:	1170 mm
2.2.5.3.	Track width sidecar:	N.A.
2.2.10.6	Ground clearance between the axles:	N.A.
2.2.15.	Wheelbase to ground clearance ratio:	N.A.
2.2.17	Seat height:	N.A.

Masses

2.1.1.	Mass in running order:	595 kg
2.1.2.	Actual mass:	835 kg
2.1.3.	Technically permissible maximum laden mass:	1604 kg
2.1.3.1.	Technically permissible maximum mass on front axle:	823 kg
2.1.3.2.	Technically permissible maximum mass on rear axle:	781 kg
2.1.3.3.	Technically permissible maximum mass on sidecar axle:	N.A.
2.1.7.	Technically permissible maximum towable mass:	
	Braked: N.A. Unbraked:	N.A.
2.1.7.1.	Technically permissible maximum laden mass of the combination:	N.A.
2.1.7.2.	Technically permissible maximum mass at the coupling point:	N.A.

Powertrain

3.1.1.1. Manufacturer: N.A.
3.1.1.2. Engine code (as marked on the engine or other means of identification): N.A.
3.2.1.2. Working principle of the combustion engine: ~~internal combustion engine (ICE)/positive ignition/compression ignition/external combustion engine (ECE)/turbine/compressed air~~
3.2.1.4.1. Number of cylinders: N.A.
3.2.1.4.2. Arrangement of cylinders: ~~LI / V / O / S~~
3.2.1.5. Engine capacity: N.A.
1.9. Maximum net power: N.A.
1.10. Ratio maximum net power/mass of the vehicle in running order: N.A.
3.2.3.1. Fuel type: N.A.
3.2.3.2. Vehicle fuel combination: ~~mono-fuel/bi-fuel/flex-fuel~~
3.2.3.2.1. Maximum amount of bio-fuel acceptable in fuel: N.A.

3.1.2.1. Manufacturer: Xuzhou Rock Drive Electric Technology Co., Ltd
3.1.2.2. Electric motor code (as marked on the engine or other means of identification): TZ155MPS092 ?????????????
3.3.3.4. ~~15~~/30 minutes power: 7.5 kW
3.1.3.1. Manufacturer: N.A.
3.1.3.2. Application code (as marked on the engine or other means of identification): N.A.
3.3.1. Electric vehicle configuration: pure electric~~/hybrid electric/manpower electric~~
3.3.5.2. Category of hybrid electric vehicle: ~~off-vehicle charging/not off-vehicle charging~~
3.9.2. Maximum assistance factor: N.A.

Maximum speed

1.8. Maximum speed of vehicle: 65 km/h
3.9.3. Maximum vehicle speed for which the electric motor gives assistance: N.A.

Drive-train and control

3.5.3.9. Transmission (type): O
3.5.4. Gear ratios: 12.603
3.5.4.1. Final drive ratio: N.A.
3.5.4.2. Overall gear ratio in highest gear: N.A.

Installation of tyres

6.18.1.1. Tyre size designation:
Axle 1: 175/65R14, 82H Axle 2: 175/65R14, 82H
Minimum load capacity index:
Axle 1: 77 Axle 2: 76
Minimum speed category symbol:
Axle 1: F Axle 2: F
Recommended pressure:
Axle 1: 300kPa Axle 2: 300kPa
Rim size:
Axle 1: 5.5*14 Axle 2: 5.5*14
Sidecar wheel: N.A.

Bodywork

6.20.2.1. Door configuration and number of doors: 1L, 1R
6.16.1. Number of seating positions: 2
6.16.1.1. Location and arrangement: r1:1L, 1R

Coupling devices

7.2.8. Type-approval number of coupling-device: N.A.

Environmental performance

4.0.1. Environmental step: Euro 5+ (~~3/4/5/~~ 5+)
4.0.6. Sound level measured according to: N.A.
4.0.6.1. Stationary: N.A.
4.0.6.2. Drive-by : N.A.
4.0.6.3. Limit value for L_{urban}: N.A.

3.2.15. Exhaust emissions measured according to: N.A.
3.2.15.1. Type I test: tailpipe emissions after cold start, including the deterioration factor, if applicable:

CO: N.A.
THC: N.A.
NMHC: N.A.
NOx: N.A.
THC+NOx: N.A.
PM: N.A.

3.2.15.2 Type II test: tailpipe emissions at (increased) idle and free acceleration:
HC: N.A. ppm at normal idling speed and: N.A. ppm at high idle speed
CO: N.A. %vol at normal idling speed and: N.A. %vol at high idle speed

3.2.15.3. Smoke corrected absorption coefficient: N.A.

Energy efficiency

4.0.2. Fuel consumption: N.A.
4.0.3. CO_2 emissions: N.A.
4.0.4. Energy consumption: 115 Wh/km
4.0.5. Electric range: 151 km

Conversion of the performance of the vehicle:

8.1. Vehicle appropriate for converting its performance level between subcategories (L3e/L4e)-A2 and (L3e/L4e)-A3 and vice versa: ~~yes~~/no

Additional information:

9.1. Remarks: N.A.
9.2. Exemptions: N.A.

COMPLETE VEHICLE
EU CERTIFICATE OF CONFORMITY

The undersigned, Mr. Cui Meng, Legal Person
Hereby certifies that the following complete vehicle:

0.1. Make (trade name of the manufacturer): JINMA

0.2. Type: TEV

0.2.1. Variant: 01

0.2.2. Version: 01

0.2.3. Commercial name (if available): TEV

0.3. Category, subcategory and sub-subcategory of vehicle: L7e-CU

0.4. Company name and address of manufacturer:
HONG KONG RUNHORSE HOLDING CO., LIMITED
FLAT 01C3, 10/F CARNIVAL COMMERCIAL BUILDING 18 JAVA ROAD,
NORTH POINT, HONG KONG, CHINA

0.4.2. Name and address of manufacturer's authorized representative (if any):
Mobit Belgium
Eindeken 3, 9940 Evergem, Belgium

0.5.1. Location of the manufacturer's statutory plate(s): C, x -134, y 0, z 680

0.5.2. Method of attachment of the manufacturer's statutory plate(s): By riveted

0.6. Location of the vehicle identification number: R, x 235, y 325, z 555

1. Vehicle identification number: ☆R3W8AZKX??A??????☆

conforms in all respects to the type described in EU type-approval e9*168/2013*16391*00 (type-approval number including extension number) (CV* type-approval number including extension number) issued on XX.XX.XXXX (date of issue) (CV* date of issue) and can be permanently registered in Member States having right/left-hand traffic and using metric/imperial units for the speedometer.

Hong Kong, China

(place)

XX.XX.XXXX

(date)

(signature)

General construction characteristics

1.3. Number of axles: 2 and wheels: 4
1.3.1. Axles with twinned wheels: N.A.
1.3.2. Powered axles: R
6.2.4. Advanced braking system: ~~ABS / CBS /~~ Both ABS and CBS ~~/ None~~

Main dimensions

2.2.1.	Length:	3690 mm
2.2.2.	Width:	1400 mm
2.2.3.	Height:	1910 mm
2.2.4.	Wheelbase:	1815 mm
2.2.4.1.	Wheelbase sidecar:	N.A.
2.2.5.	Track width	
2.2.5.1.	Track width front:	1125 mm
2.2.5.2.	Track width rear:	1170 mm
2.2.5.3.	Track width sidecar:	N.A.
2.2.10.6	Ground clearance between the axles:	N.A.
2.2.15.	Wheelbase to ground clearance ratio:	N.A.
2.2.17	Seat height:	N.A.

Masses

2.1.1.	Mass in running order:	595 kg
2.1.2.	Actual mass:	894 kg
2.1.3.	Technically permissible maximum laden mass:	1604 kg
2.1.3.1.	Technically permissible maximum mass on front axle:	796 kg
2.1.3.2.	Technically permissible maximum mass on rear axle:	808 kg
2.1.3.3.	Technically permissible maximum mass on sidecar axle:	N.A.
2.1.7.	Technically permissible maximum towable mass:	
	Braked: N.A. Unbraked:	N.A.
2.1.7.1.	Technically permissible maximum laden mass of the combination:	N.A.
2.1.7.2.	Technically permissible maximum mass at the coupling point:	N.A.

Powertrain

3.1.1.1. Manufacturer: N.A.
3.1.1.2. Engine code (as marked on the engine or other means of identification): N.A.
3.2.1.2. Working principle of the combustion engine: ~~internal combustion engine (ICE)/positive ignition/compression ignition/external combustion engine (ECE)/turbine/compressed air~~
3.2.1.4.1. Number of cylinders: N.A.
3.2.1.4.2. Arrangement of cylinders: ~~LI / V / O / S~~
3.2.1.5. Engine capacity: N.A.
1.9. Maximum net power: N.A.
1.10. Ratio maximum net power/mass of the vehicle in running order: N.A.
3.2.3.1. Fuel type: N.A.
3.2.3.2. Vehicle fuel combination: ~~mono-fuel/bi-fuel/flex-fuel~~
3.2.3.2.1. Maximum amount of bio-fuel acceptable in fuel: N.A.

3.1.2.1. Manufacturer: Xuzhou Rock Drive Electric Technology Co., Ltd
3.1.2.2. Electric motor code (as marked on the engine or other means of identification): TZ155MPS092 ?????????????
3.3.3.4. ~~15~~/30 minutes power: 7.5 kW
3.1.3.1. Manufacturer: N.A.
3.1.3.2. Application code (as marked on the engine or other means of identification): N.A.
3.3.1. Electric vehicle configuration: pure electric~~/hybrid electric/manpower electric~~
3.3.5.2. Category of hybrid electric vehicle: ~~off-vehicle charging/not off-vehicle charging~~
3.9.2. Maximum assistance factor: N.A.

Maximum speed

1.8. Maximum speed of vehicle: 65 km/h
3.9.3. Maximum vehicle speed for which the electric motor gives assistance: N.A.

Drive-train and control

3.5.3.9. Transmission (type): O
3.5.4. Gear ratios: 12.603
3.5.4.1. Final drive ratio: N.A.
3.5.4.2. Overall gear ratio in highest gear: N.A.

Installation of tyres

6.18.1.1. Tyre size designation:
Axle 1: 175/65R14, 82H Axle 2: 175/65R14, 82H
Minimum load capacity index:
Axle 1: 76 Axle 2: 77
Minimum speed category symbol:
Axle 1: F Axle 2: F
Recommended pressure:
Axle 1: 300kPa Axle 2: 300kPa
Rim size:
Axle 1: 5.5*14 Axle 2: 5.5*14
Sidecar wheel: N.A.

Bodywork

6.20.2.1. Door configuration and number of doors: 1L, 1R
6.16.1. Number of seating positions: 2
6.16.1.1. Location and arrangement: r1:1L, 1R

Coupling devices

7.2.8. Type-approval number of coupling-device: N.A.

Environmental performance

4.0.1. Environmental step: Euro 5+ (~~3/4/5/~~ 5+)
4.0.6. Sound level measured according to: N.A.
4.0.6.1. Stationary: N.A.
4.0.6.2. Drive-by : N.A.
4.0.6.3. Limit value for L_{urban}: N.A.

3.2.15. Exhaust emissions measured according to: N.A.
3.2.15.1. Type I test: tailpipe emissions after cold start, including the deterioration factor, if applicable:

CO: N.A.
THC: N.A.
NMHC: N.A.
NOx: N.A.
THC+NOx: N.A.
PM: N.A.

3.2.15.2 Type II test: tailpipe emissions at (increased) idle and free acceleration:
HC: N.A. ppm at normal idling speed and: N.A. ppm at high idle speed
CO: N.A. %vol at normal idling speed and: N.A. %vol at high idle speed

3.2.15.3. Smoke corrected absorption coefficient: N.A.

Energy efficiency

4.0.2. Fuel consumption: N.A.
4.0.3. CO_2 emissions: N.A.
4.0.4. Energy consumption: 115 Wh/km
4.0.5. Electric range: 151 km

Conversion of the performance of the vehicle:

8.1. Vehicle appropriate for converting its performance level between subcategories (L3e/L4e)-A2 and (L3e/L4e)-A3 and vice versa: ~~yes~~/no

Additional information:

9.1. Remarks: N.A.
9.2. Exemptions: N.A.

COMPLETE VEHICLE
EU CERTIFICATE OF CONFORMITY

The undersigned, Mr. Cui Meng, Legal Person
Hereby certifies that the following complete vehicle:

0.1. Make (trade name of the manufacturer): JINMA

0.2. Type: TEV

0.2.1. Variant: 01

0.2.2. Version: 02

0.2.3. Commercial name (if available): TEV

0.3. Category, subcategory and sub-subcategory of vehicle: L7e-CU

0.4. Company name and address of manufacturer:
HONG KONG RUNHORSE HOLDING CO., LIMITED
FLAT 01C3, 10/F CARNIVAL COMMERCIAL BUILDING 18 JAVA ROAD,
NORTH POINT, HONG KONG, CHINA

0.4.2. Name and address of manufacturer's authorized representative (if any):
Mobit Belgium
Eindeken 3, 9940 Evergem, Belgium

0.5.1. Location of the manufacturer's statutory plate(s): C, x -134, y 0, z 680

0.5.2. Method of attachment of the manufacturer's statutory plate(s): By riveted

0.6. Location of the vehicle identification number: R, x 235, y 325, z 555

1. Vehicle identification number: ☆R3W8AZKX??A??????☆

conforms in all respects to the type described in EU type-approval e9*168/2013*16391*00 (type-approval number including extension number) (CV* type-approval number including extension number) issued on XX.XX.XXXX (date of issue) (CV* date of issue) and can be permanently registered in Member States having right/left-hand traffic and using metric/imperial units for the speedometer.

Hong Kong, China

(place)

XX.XX.XXXX

(date)

(signature)

General construction characteristics

1.3. Number of axles: 2 and wheels: 4
1.3.1. Axles with twinned wheels: N.A.
1.3.2. Powered axles: R
6.2.4. Advanced braking system: ~~ABS / CBS /~~ Both ABS and CBS ~~/ None~~

Main dimensions

2.2.1.	Length:	3690 mm
2.2.2.	Width:	1400 mm
2.2.3.	Height:	2080 mm
2.2.4.	Wheelbase:	1815 mm
2.2.4.1.	Wheelbase sidecar:	N.A.
2.2.5.	Track width	
2.2.5.1.	Track width front:	1125 mm
2.2.5.2.	Track width rear:	1170 mm
2.2.5.3.	Track width sidecar:	N.A.
2.2.10.6	Ground clearance between the axles:	N.A.
2.2.15.	Wheelbase to ground clearance ratio:	N.A.
2.2.17	Seat height:	N.A.

Masses

2.1.1.	Mass in running order:	595 kg
2.1.2.	Actual mass:	894 kg
2.1.3.	Technically permissible maximum laden mass:	1604 kg
2.1.3.1.	Technically permissible maximum mass on front axle:	810 kg
2.1.3.2.	Technically permissible maximum mass on rear axle:	794 kg
2.1.3.3.	Technically permissible maximum mass on sidecar axle:	N.A.
2.1.7.	Technically permissible maximum towable mass:	
	Braked: N.A. Unbraked:	N.A.
2.1.7.1.	Technically permissible maximum laden mass of the combination:	N.A.
2.1.7.2.	Technically permissible maximum mass at the coupling point:	N.A.

Powertrain

3.1.1.1. Manufacturer: N.A.
3.1.1.2. Engine code (as marked on the engine or other means of identification): N.A.
3.2.1.2. Working principle of the combustion engine: ~~internal combustion engine (ICE)/positive ignition/compression ignition/external combustion engine (ECE)/turbine/compressed air~~
3.2.1.4.1. Number of cylinders: N.A.
3.2.1.4.2. Arrangement of cylinders: ~~LI / V / O / S~~
3.2.1.5. Engine capacity: N.A.
1.9. Maximum net power: N.A.
1.10. Ratio maximum net power/mass of the vehicle in running order: N.A.
3.2.3.1. Fuel type: N.A.
3.2.3.2. Vehicle fuel combination: ~~mono-fuel/bi-fuel/flex-fuel~~
3.2.3.2.1. Maximum amount of bio-fuel acceptable in fuel: N.A.

3.1.2.1. Manufacturer: Xuzhou Rock Drive Electric Technology Co., Ltd
3.1.2.2. Electric motor code (as marked on the engine or other means of identification): TZ155MPS092 ?????????????
3.3.3.4. ~~15~~/30 minutes power: 7.5 kW
3.1.3.1. Manufacturer: N.A.
3.1.3.2. Application code (as marked on the engine or other means of identification): N.A.
3.3.1. Electric vehicle configuration: pure electric~~/hybrid electric/manpower electric~~
3.3.5.2. Category of hybrid electric vehicle: ~~off-vehicle charging/not off-vehicle charging~~
3.9.2. Maximum assistance factor: N.A.

Maximum speed

1.8. Maximum speed of vehicle: 65 km/h
3.9.3. Maximum vehicle speed for which the electric motor gives assistance: N.A.

Drive-train and control

3.5.3.9. Transmission (type): O
3.5.4. Gear ratios: 12.603
3.5.4.1. Final drive ratio: N.A.
3.5.4.2. Overall gear ratio in highest gear: N.A.

Installation of tyres

6.18.1.1. Tyre size designation:
Axle 1: 175/65R14, 82H Axle 2: 175/65R14, 82H
Minimum load capacity index:
Axle 1: 77 Axle 2: 76
Minimum speed category symbol:
Axle 1: F Axle 2: F
Recommended pressure:
Axle 1: 300kPa Axle 2: 300kPa
Rim size:
Axle 1: 5.5*14 Axle 2: 5.5*14
Sidecar wheel: N.A.

Bodywork

6.20.2.1. Door configuration and number of doors: 1L, 1R
6.16.1. Number of seating positions: 2
6.16.1.1. Location and arrangement: r1:1L, 1R

Coupling devices

7.2.8. Type-approval number of coupling-device: N.A.

Environmental performance

4.0.1. Environmental step: Euro 5+ (~~3/4/5/~~ 5+)
4.0.6. Sound level measured according to: N.A.
4.0.6.1. Stationary: N.A.
4.0.6.2. Drive-by : N.A.
4.0.6.3. Limit value for L_{urban}: N.A.

3.2.15. Exhaust emissions measured according to: N.A.
3.2.15.1. Type I test: tailpipe emissions after cold start, including the deterioration factor, if applicable:

CO: N.A.
THC: N.A.
NMHC: N.A.
NOx: N.A.
THC+NOx: N.A.
PM: N.A.

3.2.15.2 Type II test: tailpipe emissions at (increased) idle and free acceleration:
HC: N.A. ppm at normal idling speed and: N.A. ppm at high idle speed
CO: N.A. %vol at normal idling speed and: N.A. %vol at high idle speed

3.2.15.3. Smoke corrected absorption coefficient: N.A.

Energy efficiency

4.0.2. Fuel consumption: N.A.
4.0.3. CO_2 emissions: N.A.
4.0.4. Energy consumption: 115 Wh/km
4.0.5. Electric range: 151 km

Conversion of the performance of the vehicle:

8.1. Vehicle appropriate for converting its performance level between subcategories (L3e/L4e)-A2 and (L3e/L4e)-A3 and vice versa: ~~yes~~/no

Additional information:

9.1. Remarks: N.A.
9.2. Exemptions: N.A.